Ken Stone Heavy Industry

excavator

RH22B、RH22C Operation Manual

山 东 肯 石 重 工 机 械 有 限 公 司
Shandong Ken Stone Heavy Machinery CO,Ltd.

Note

Title: Precautions for Maintenance and Accessories

First of all, thank you for choosing and using Kenshi products.

When equipment malfunctions, our company or designated maintenance company should use genuine parts for maintenance.

Currently, there are counterfeit and substandard parts entering the market through illegal means, as well as unauthorized and untrained companies or individuals

The human repair of our company's products has caused many legacy problems, seriously affecting the performance and service life of the equipment.

Considering the above situation, we kindly ask our customers to pay attention to:

1) Using non genuine components may not have a significant impact on the equipment in the short term, and will inevitably cause a series of issues

Good consequences. To avoid equipment damage, performance degradation, and more serious losses, do not use impure materials

Main components.

2) When customers purchase parts, they must choose from our company or the authorized agency that operates the parts, and note that

Please contact our company for confirmation if there are any suspicious phenomena.

3) When customers need to repair their equipment, please call Kenshi's national unified service hotline 0635-5663999 for repair.

4) If equipment malfunction occurs due to the use of non genuine parts or repair by unauthorized companies or individuals, i.e

During the warranty period, our company also has no warranty liability.

5) With the improvement of the product, the content of this manual may lag behind. If the customer needs the latest product information, please

Contact our company or authorized dealers.

Thank you again for your usual business collaboration.

Sincerely

Shandong Kenshi Heavy Industry Machinery Co., Ltd

Contents

Introduction.....0-4

Machine description.....0-5

Safety.....1-1

General precautions.....1-2

Precautions when preparing.....1-8

Safety measures when starting.....1-11

Precautions when operating.....1-13

Precautions when stopping.....1-23

Precautions when transportation.....1-24

Precautions when maintenance.....1-26

Safety signs (identification).....1-37

Control.....2-1

Parts name.....2-2

Cover.....2-4

Seat and seat belt 2-7

Cab..... 2-9

control.....2-18

Operation.....3-1

Before opeartion.....3-2

Start and stop the engine.....3-3

Operate the excavator.....3-5

Operating procedures.....3-14

Park the machine.....3-23
Processing in cold weather.....3-24
Handling rubber tracks.....3-25
Turn on the warm air.....3-28
Lift the cab.....3-29
Reset the cab.....3-31
Transportation.....4-1
Load and unload.....4-2
Hoist excavator.....4-4
Fix machine.....4-6
Maintenance.....5-1
Overview.....5-2
Service data.....5-4
Safety critical components.....5-10
Detour check.....5-14
Daily routine inspection (or every 10 hours).....5-16
After the first 50 hours (only for new machines).....5-22
Every 50 hours.....5-25
Every 100 hours.....5-30
After the first 250 hours.....5-31
Every 250 hours.....5-32
Every 500 hours.....5-36
Every 1000 hours.....5-38
Every 1500 hours.....5-43
Every 2000 hours.....5-44
When needed.....5-46
Maintenance during long parking periods.....5-53

Troubleshooting.....6-1
Symptoms that are not malfunctions.....6-2
If the engine is overheated.....6-3
If the battery is dead.....6-4
If the fuse blows.....6-6
Restart after fueling.....6-8
If the warning light flashes.....6-9
Other symptoms.....6-10
Lower the boom to the ground.....6-12
Towing.....6-13
If the cab or canopy is damaged.....6-14
Parameter.....7-1
Main parameter.....7-2
Accessories.....8-1
General safety measures.....8-2
Hydraulic breaker.....8-5
Walking alarm device.....8-9
Weight of accessories.....8-10

SAFETY WARNING SYMBOL

This symbol indicates a safety warning. The information following the symbol contains important safety information. Please read and understand this information to avoid personal injury or death.

The owner or employer of the machine is responsible for instructing each operator in the correct and safe operation of the equipment in detail. All personnel operating this machine should be fully familiar with the contents of this manual.
Before operating the machine, all operators must accept instructions on the relevant functions of the excavator.
Before operating the machine on the construction site, you should learn and practice how to use the machine control correctly in a safe and open place.

SAFETY WARNING SYMBOL

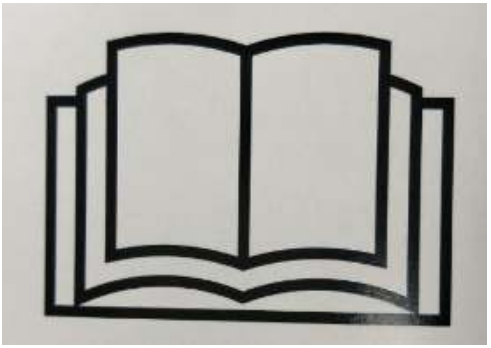

When operating, inspecting and maintaining the machine, improper methods can result in injury or death. Please read and understand this manual before performing any operation, inspection or maintenance on the machine.

Make sure to bring this manual with you. If the manual is lost or damaged, please obtain a new manual from your Ken Stone dealer immediately.
When transferring this machine to someone else, be sure to transfer this manual to the new owner.
The machines supplied by the Ken Stone company comply with the local regulations and standards of the exporting country. If your machine is purchased from another country or from an individual or company in another country, then the machine may not have the required safety devices or safety standards for use in your country. If you have any questions about whether your machine complies with the relevant regulations and standards of your country, please contact your Ken Stone dealer.

Signal Words

The safety information on this manual and machine identifications is indicated by words “Danger”, “Warning”, and “Notice”. The meanings of these signal words are as below:

⚠ Danger

“Danger” denotes high dangerous level, for which the negligence will result in death or serious injury.

⚠ Warning

“Warning” denotes medium danger level, for which the negligence will probably result in death or serious injury.

⚠ Notice

“Notice” denotes low danger level, for which the negligence will result in minor or medium injuries.

Important: The word “Importance” is intended to alert the operation and maintenance personnel of the possible damages of machine and its components.

It’s impossible for us to predict all possibly existed dangers. Therefore, the warnings in this manual or on this machine can’t cover all possible accidents. Therefore, during the operations of machine, ensure to take cautions and abide by all conventional safety measures to prevent harms to machine, operation personnel, or other personnel.

INTRODUCTION

Preface

This manual introduces the operation, inspection and maintenance of the machine, as well as the safety instructions that should be paid attention to during the operation.
If you have any questions about the machine, please contact Ken Stone company sales or distributors.

• In some details, this manual may be different from the manual that comes with the machine you are using.
• The information in this manual and the parameters of the whole machine are subject to change without notice.

The manual is in the vehicle information package

Serial number

Important: Do not remove the machine nameplate with the serial number.
Check the serial numbers of the machine and engine and record them in the space below.

Series no.:

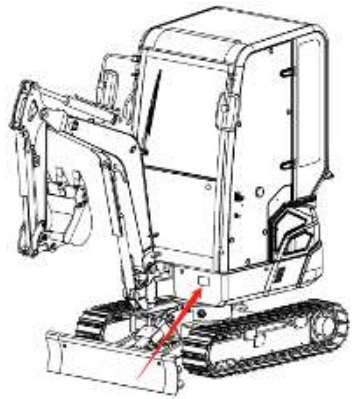

Engine no.:

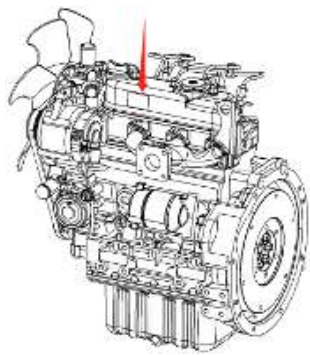

Front, back, left and right

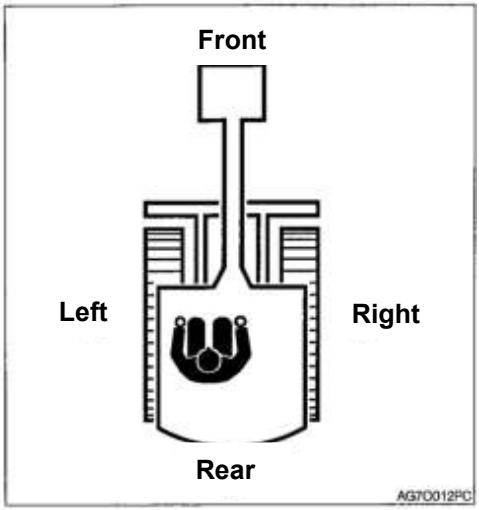

The front, rear, left, and right of the machine indicated in this manual refer to the state where the bulldozer is visible from the front in the driver's seat.

Specified operation

This machine is mainly used for the following operations:

- Digging
- Trenching
- Leveling
- Loading

Features

- Track width "flexible machine width structure"
- Low engine noise and low emissions

Regular

For the first 100 hours of the new machine (as indicated by the timer), please follow the instructions below: Using a new machine without a regular basis will result in an accelerated decrease in machine performance and possibly shorten the life of the machine.

- Allow the engine and hydraulic oil to fully warm up.
- Avoid heavy load and fast operation. The loading capacity during operation is maintained at approximately 80% of its maximum loading capacity.
- If not necessary, do not start, accelerate, change direction, or stop suddenly.

SAFETY

General precaution

You are responsible for following the safety regulations and laws of relevant departments, and operating, inspecting and maintaining the machine in accordance with the manufacturer's requirements.

In fact, most accidents are caused by failure to comply with basic safety regulations and precautions.

Most accidents can be avoided by identifying potential hazards in advance.

Please read and understand all safety information describing how to prevent accidents. Do not operate the machine until you are sure that you understand how to properly operate, inspect, and maintain the machine.

Comply with all safety regulations

There must be trained and qualified personnel to operate, inspect and maintain the machine.

During the operation, inspection and maintenance of the machine, all rules, regulations, precautions and safety measures must be understood and followed.

Do not operate, inspect and maintain the machine under the adverse effects of alcohol, drugs, fatigue, or lack of sleep.

When the machine is found to be abnormal

During machine operation or inspection and maintenance, if any abnormality (noise, vibration, peculiar smell, instrument abnormality, smoke or oil leakage, false alarm indication or abnormal display of electrical control panel, etc.) is found, the sales or service agent should be notified immediately And take appropriate measures. Do not operate the machine until the abnormality is eliminated.

Operating temperature range

In order to maintain the performance of the machine and avoid premature wear, please observe the following operating conditions.

If the outdoor temperature exceeds +45° C or is lower than -15° C, do not operate the machine.

If the outdoor temperature exceeds +45° C, the engine may overheat, resulting in a decrease in engine oil performance. Moreover, hydraulic oil may become very hot, causing damage to hydraulic equipment.

If you operate at an outdoor temperature lower than -15° C, rubber parts such as

gaskets may become hard, causing premature wear or damage to the machine. If you need to operate the machine outside the above outdoor temperature range, please consult your sales or service agent.

Wear suitable clothing and protective equipment

Do not wear loose clothing or accessories that may hang control rods or moving parts.

- Do not wear clothes that are easily ignited and stained with oil or fuel.
- According to the requirements of the working environment, wear safety shoes, helmets, safety glasses, filter masks, thick gloves, ear protection and other protective equipment. When using grinders, breakers or compressed air, you should wear appropriate protective equipment, such as safety glasses and filter masks, because metal chips or other objects splashing may cause serious injuries.
- When operating the machine, use hearing protection. Exposing to high noise for a long time can damage hearing or even completely lose it.

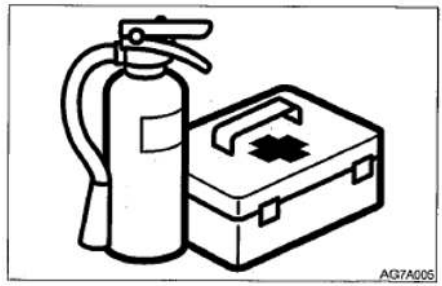

Prepare for fires and accidents

- Install fire extinguishers and first aid kits and learn how to use them.
- Know how to contact emergency assistance and make a list of emergency contacts.

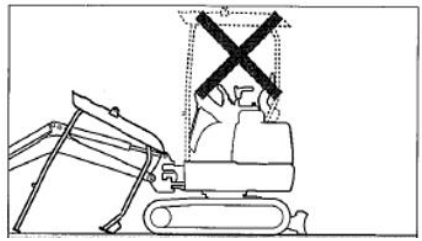

- Please make sure that all guard rails, ceilings, doors, etc. are installed in place and firmly. Repair or replace damaged parts.
- Know how to use safety lock levers, seat belts and other safety devices and be able to use them correctly.
- Except for maintenance, never remove any safety devices. Make all safety devices always maintain good working conditions.

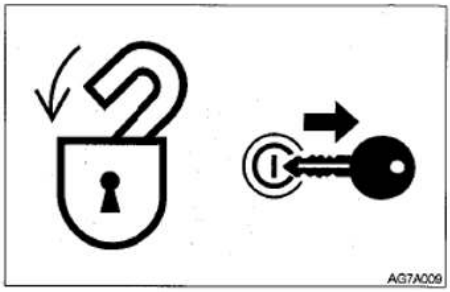

Precautions when leaving the driver's seat

- When standing up from the driver's seat to open/close the window or remove/install the lower window, lower the working device to the ground, lift the safety lock lever to lock and stop the engine. When the safety lock lever is lowered (unlocked), if you accidentally touch any control handle, the machine will suddenly move and cause serious injury or death.
- Please note that even when the safety lock lever is set to the locked position, the bulldozer, boom swing and auxiliary hydraulic controls cannot be locked. Do not touch these controls.
- When raising or lowering the safety lock lever, be careful not to touch the lever.
- Before leaving the driver's seat, lower the working device to the ground, raise the safety lock lever to the locked position, and turn off the engine. At the same time, please be sure to pull out the key, lock the door and cover, and carry the key with you, and then store it in the designated place.

Signalman and signal flagman

Learn how to use the gestures required for a specific assignment and identify the person responsible for the gesture.

- All personnel must fully understand all gestures.
- The operator must only respond to the gesture of the designated person, but must obey any person's stop gesture at any time.
- When the signalman sends a signal, he must stand in a clearly visible place.

Avoid fire and explosion hazards

Keep fuel, lubricating oil, grease and antifreeze away from flames. Fuel is particularly flammable and very dangerous.

- When handling these combustibles, stay away from lit cigarettes, matches, lighters, and other flames or sources of ignition.
- When handling fuel oil or working on the fuel system, do not smoke or present open flames.
- When replenishing fuel or lubricating oil, do not leave the job site.
- When the engine is running or has not yet cooled down, do not remove the fuel tank cap or refuel. Also, do not splash fuel on the hot surface of the machine or electronic system components.
- Clean up the spilled fuel or lubricating oil immediately.
- Check for fuel and lubricating oil leaks. Please remove the leak and clean the machine before operation.
- When polishing or welding, please move flammable materials to a safe place.
- Do not cut or weld on pipes or pipes that contain flammable liquids. Before cutting or welding, please clean it thoroughly with a non-flammable solvent.
- Remove all rubbish or debris from the machine. Make sure that no oily rags or other flammable materials remain on the machine.
- Dispose of various solvents and dry chemicals (foam-type fire extinguishers) according to the procedures marked on the manufacturer's containers. Carry out in a well-ventilated place.
- Never use fuel for cleaning purposes. Always use non-flammable solvents.
- When handling fuel, cleaning oil stains or paint, please open doors and windows for thorough ventilation.
- Keep all flammable liquids and materials in a safe and well-ventilated place.
- A short circuit in the electronic system may cause a fire. Check every day whether the wire connection is loose or damaged. Retighten loose connectors and cable buckles. Repair or replace damaged wires.
- Fire caused by pipes: Ensure that the buckles, protection devices and cushions of hoses and pipes are firmly fixed. If loose, hoses and tubes will be damaged due to vibration or contact with other parts during operation. This may cause high-pressure oil to spray out, causing fire or injury.

Exhaust from the engine is toxic

- Do not operate the engine in a closed place with poor ventilation.
- If natural ventilation is not possible, ventilation fans, fans, extended exhaust pipes or other ventilation devices should be installed.

Handling of asbestos dust

Inhalation of asbestos dust may cause lung cancer. When handling materials that may contain asbestos, take the following safety measures:

- Never use compressed air for cleaning.
- Avoid polishing or sanding parts that contain asbestos.
- When cleaning, please use vacuum equipment equipped with a high efficiency particulate air filter (HEPA).
- If there is no other way to control dust, please wear the specified respirator. When working indoors, please install a ventilation system equipped with a polymer filter.
- During operation, do not allow unauthorized personnel to enter the work area.
- Please strictly abide by the rules and environmental standards applicable to the work area.

Be careful of crushing or cuts

Do not place hands, feet or other body parts between the upper frame and the lower frame or between the crawlers, between the body and the working device, or between the cylinder and the moving part. When the machine moves, the size of these gaps will change, which may cause serious injury or death.

Use attachments

- Before installing attachments, please consult Ken Stone Heavy Industries. Depending on the type of attachment or their combination, the attachment may touch the cab or other parts of the machine. Before use, make sure that the attached attachment does not touch other parts.
- Do not use accessories that have not been approved by Ken Stone Heavy Industries. Doing so may endanger safety or adversely affect the operation or service life of the machine.
- Ken Stone Heavy Industry is not responsible for any injury, accident or product damage caused by the use of unauthorized accessories.

Do not modify the machine

Unauthorized modifications to the machine can cause injury or death. Do not make unauthorized modifications to any part of the machine.

Precautions when preparing

Understand the work area

Before starting operation, you should understand the working area to ensure safety.

- ●Check the topography and ground conditions of the work area. When working indoors, check the structure of the building and take safety measures when necessary.
- ●Be sure to avoid hazards and obstacles such as water ditches, underground pipelines, trees, cliffs, overhead power lines, or areas with falling rocks or landslides.

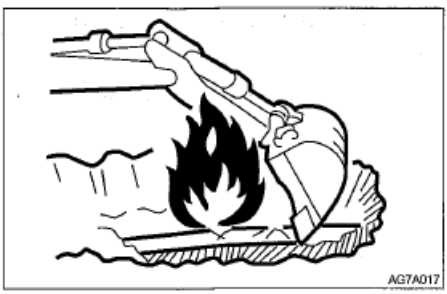

- ●Check the location of underground gas pipes, water pipes and power cables with the administrator. If necessary, consult with the administrator and determine the specific security measures that must be taken to ensure safety.
- ●When working on the road, the safety of pedestrians and vehicles must be considered.
- ●Hire signalers and/or use signals
- ●Isolate the work area, and unauthorized personnel are not allowed to enter.
- ●When working in the water or driving through a shallow stream, check the water depth, the firmness of the ground and the speed of the water in advance.

Please refer to "Operation Precautions" for more instructions for use.

Check the strength of the bridge deck

When walking on a bridge or structure, check the allowable load.
If the strength is insufficient, the bridge or structure should be strengthened.

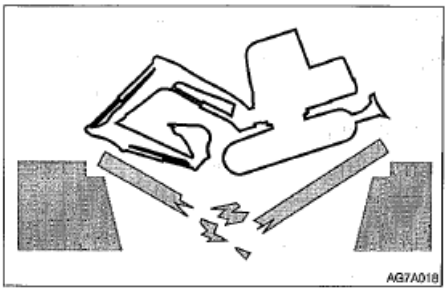

Always keep the machine clean

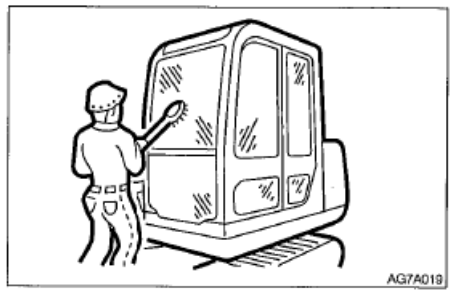

Wipe off lubricating oil, grease, mud, snow or ice to prevent accidents caused by slipping.

- Eliminate all loose bodies and unnecessary devices in the machine.
- Eliminate dust, lubricating oil or grease from engine parts to prevent fire.
- Clean around the seat and remove any unnecessary objects from the machine.

Daily inspection and maintenance

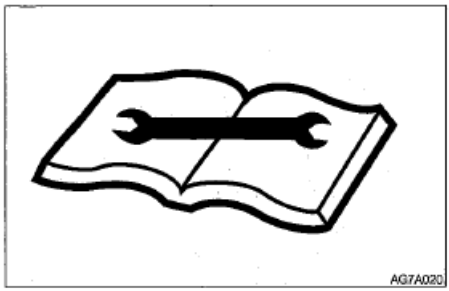

Unidentified abnormal conditions or damage can cause accidents.

- Before operation, please carry out the designated inspection and repair it immediately if necessary.
- If a malfunction occurs and cannot be operated or the engine malfunctions, immediately follow the shutdown procedure to stop the machine and park the machine firmly until the malfunction is repaired.

Precautions in the cab

- Before entering the cab, please remove the dirt and grease from the sole of the shoe. Operating the machine pedal with dirt and grease adhering to the sole can cause accidents due to slipping under your feet.
- Do not place parts or tools around the seat.
- Do not place any plastic bottles in the cab or install any suction cups on the window glass. The plastic bottle or suction cup acts as a lens and may cause a fire.
- Do not use your mobile phone while walking or working.
- Do not bring combustibles or explosives into the cab.
- Do not leave the cigarette lighter in the cab. When the room temperature rises, the cigarette lighter may explode.

Emergency Exit

Front window (excluding machines with front protective

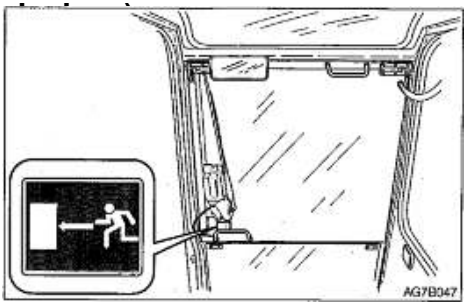

If trapped inside the driver's cab, please open the front window and get out.

Safety hammer

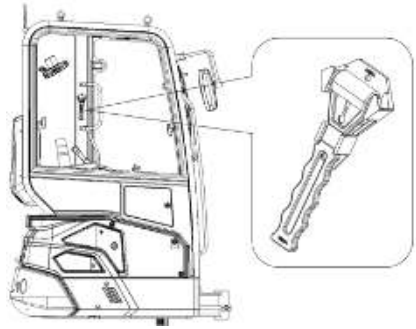

The purpose of installing a safety hammer is to escape from the driver's cab in emergency situations. When escaping, use a safety hammer to break through the window glass.

When using a safety hammer to break the window glass, please be careful not to let the glass fragments hurt yourself;

Remove glass fragments from the windowsill to prevent scratching oneself during evacuation. Broken glass can fall from the window, be careful where you stand and do not slide on the glass.

Precautions when starting

Support your weight with a three-point safety posture when getting on/off the excavator

- Do not jump on or off the machine. Do not try to get up or down the moving machine.
- To get in and out of the cab, first fully open the door to the locked position, and check to make sure that the door can no longer move (for machines with a cab).

- Do not use the safety lock lever or attachment lever as an armrest.

Before starting the machine, ask any unauthorized person to leave the area

The machine can be started only after checking the following items to make sure that it can be started safely.

- Go around the machine once and warn the maintenance staff and those walking near the machine. After confirming that there are no people around the machine, start the machine.

- Check whether there are warning signs or similar signs on the cab door, joystick or start switch that indicate "do not operate". If so, do not start the engine or touch any joysticks.
- Honk the horn to warn people around the machine.

Sit in the seat and start the engine

- Adjust the seat to securely lock. fasten your seatbelt.
- Check whether the parking device is activated, and whether all control levers and pedals are in the neutral position.
- Check whether the safety lock lever is in the locked position.

Precautions when starting

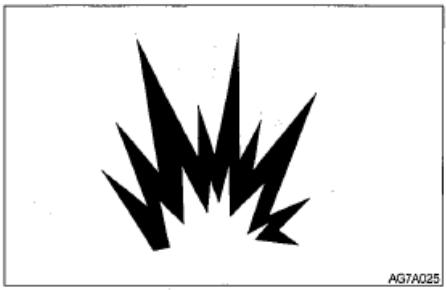

Starting with jumper cables can only be done in the recommended way. Improper use of jumper cables may cause battery explosion or unexpected machine actions.
Please refer to "If the battery is dead" for more instructions.
After starting the engine, perform the following operations and inspections where there are no people or obstacles. If any failure is found, shut down according to the procedure and report the failure.

- Preheat the engine and hydraulic oil.
- Check whether the instruments and alarm devices are working properly.
- Check for noise.
- Test the engine speed control.
- Operate the controls to ensure that they are working properly.

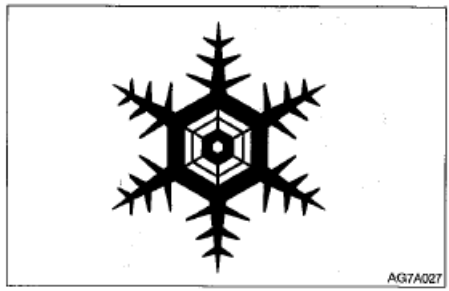

Be careful of frozen ground, slippery on the pedals and handles.
In severe cold weather, do not touch any metal parts of the machine with bare hands. The skin can freeze to the metal and cause serious injury.

Do not use ether or starter fluid on the engine. Starting fluid can cause an explosion and serious injury or death.

Preheat the engine and hydraulic oil. If the control lever is operated without preheating, the machine will not react or move quickly or appropriately, causing an accident.

Precautions when operating

Do not carry people on the machine

When the machine is walking or operating, no one other than the driver is allowed to ride on any part of the machine at any time.

Check the field of vision before operating the machine

When working in a dark place, turn on the working lights and headlights of the machine, and install additional lighting when necessary.

When the line of sight is poor due to bad weather (fog, snow, rain or haze), stop operating the machine until the line of sight improves.

Clean windows, mirrors, lights and cameras to ensure good visibility. Adjust the mirror and camera to the best position so that the operator can see the rear view (blind spot) from the driving place.

Unauthorized machine modification or installation of unauthorized accessories may affect visibility. The operator’s field of view must comply with ISO 5006.

Before operation, check whether the work area is safe and reliable

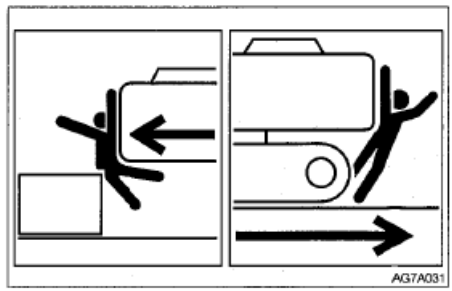

Confirm the performance limit of the machine.

Use signalmen at road shoulders, narrow places, or places where the line of sight is obstructed.

Never allow anyone to enter the turning radius and path of the machine.

Express your intention to move by honking the horn.

There is a blind spot for viewing angle behind the machine. Before walking backwards, please check the safety behind and confirm that there is no one behind.

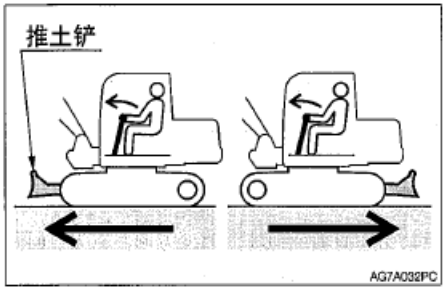

Before walking, check the relative position of the lower frame (tracks)

Before operating the walking joystick/pedal, make sure that the bulldozer is placed in front of the seat. When the blade is behind the seat, the operating direction of the walking lever/pedal must be opposite to that when the blade is in front of the seat.

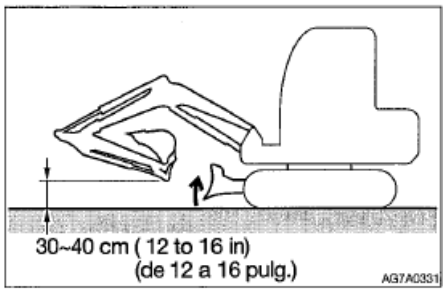

Safe walking

When walking, raise the bulldozer, retract the bucket, and raise the bucket to 30 to 40 cm above the ground.

Do not rotate when walking. If the bucket must be operated while walking, the speed should be slow enough so that you can fully control it at all times.

When walking at high speed and when the load is greater than the set value, its speed will automatically slow down to a low speed. When the load is reduced, the speed will increase and return to high speed. It should be noted that the traveling speed varies according to the load conditions (machines equipped with automatic traveling gear shifting and deceleration systems).

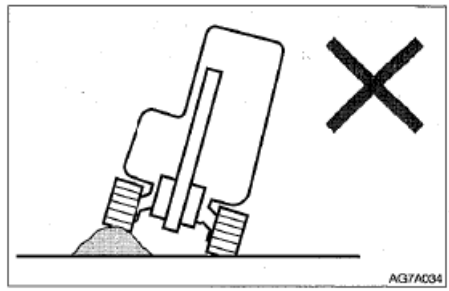

must do this, keep the bucket working device close to the ground and walk slowly. Do not go over obstacles that can tilt the machine at an angle of 10° or more.

On uneven roads, keep walking at a low speed and avoid sudden starts, stops or changes of direction. Otherwise, the working device may come into contact with the ground, causing the machine to lose balance and damage or damage the knots in the surrounding area.

Precautions for driving on slopes

When walking on a slope or ramp, pay attention to prevent the machine from overturning or sliding down. Do not walk on steep slopes where the machine cannot maintain its stability. Please note that in actual use, the performance of the machine on slopes will decline due to its harsh operating conditions.

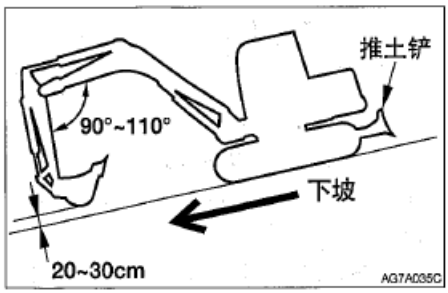

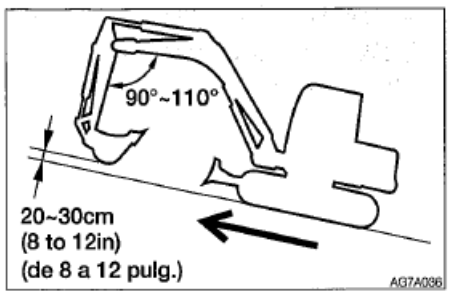

Keep the seat facing uphill when climbing. When going downhill, keep the seat facing downhill. In both cases, you must pay attention to the ground in front of the machine when walking. When walking on a slope, lower the bucket 20 to 30 cm above the ground. When climbing a steep slope, extend the bucket to the front. In an emergency, lower the bucket to the ground and turn off the machine. When walking on a slope or ramp, drive slowly at a low speed. Reduce engine speed when going downhill. Do not reverse downhill.

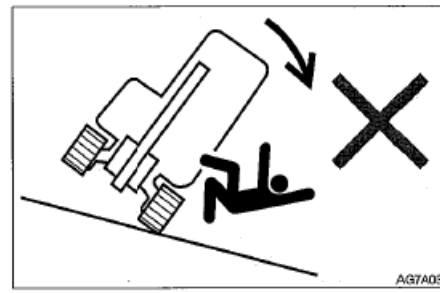

Do not change direction on slopes or cross slopes. First return to flat ground, and then take another path.

When walking on a gentle slope covered with grass or dead leaves, or when walking on wet metal plates or frozen ground, the machine may slip. Make sure that the machine is not parked sideways on a slope.

If the machine stalls on a slope, return the operating levers to the neutral position, and then restart the engine.

Operating machines on snow or ice requires extra care

When walking on snowy or icy ground, drive at low speed to avoid sudden start, stop or change of direction.

In snowy areas, the road shoulders and objects placed on the side of the road are buried in the snow and cannot be seen. There is also the risk of the machine overturning or colliding with covered objects, so always handle it carefully.

If the machine enters thick snow, there is a danger of overturning or being buried in the snow. Drive carefully and don't go over the shoulder of the road or get trapped in snow.

For frozen soil surfaces, when the temperature rises, the ground becomes soft, which may cause the machine to overturn and cause the operator to be trapped in the machine.

When parking the machine on unstable ground, lower the bulldozer.

Ensure the safety of the driver when loading

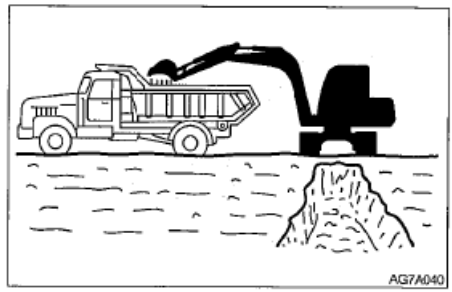

Do not load until the driver reaches a safe place.

Do not swing or park the bucket on people or the cab.

Loading from the back door of the truck.

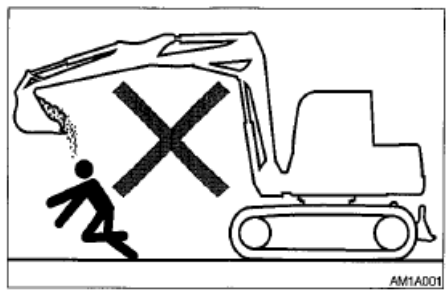

Do not move the bucket over the head of the person

If the bucket is moved above the head of a person, there is a risk of the load being scattered or the bucket suddenly falling.

Keep a safe distance from overhead high-voltage cables

Do not bring any part of the machine or loaded materials close to the high-voltage cables unless all safety measures required by local and national agencies have been taken. If a person approaches a machine that is discharging sparks or is approaching or touching the power source, there is a risk of electric shock and death.

Always maintain a safe distance between the machine and high-voltage cables.

Before starting the operation, please check with the local power company regarding the procedures for safe operation.

Treat all cables as high-voltage cables, and treat them as live cables even if the power supply is known or believed to have been cut off and the cables are clearly grounded.

If the machine is too close to high-voltage power lines, use a signaller to issue a warning.

Note that all personnel in the work area are not allowed to approach the machine or the loaded materials.

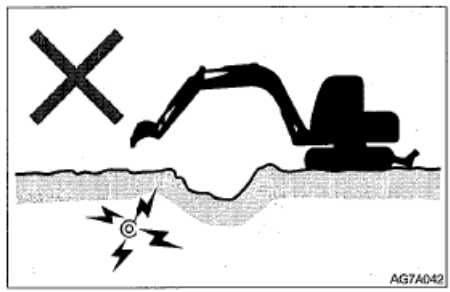

Please also pay special attention to high-voltage cables buried in the ground.

Pay close attention to hazardous working conditions

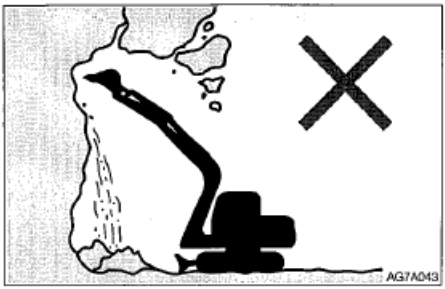

Do not dig at the bottom of a high embankment. Doing so may cause the ground to collapse, so it is very dangerous.

Do not operate in a place where there is a risk of falling rocks.

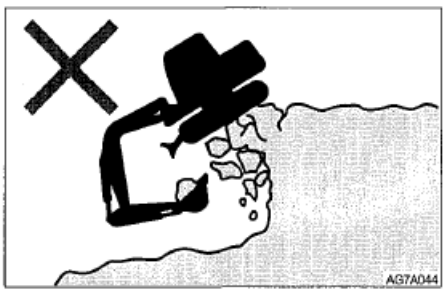

Maintain a safe distance between the machine and the edge of the excavation site. Do not dig the ground in front of the machine.

When working close to a cliff or a road shoulder, in order to make it easier to escape when a problem occurs, during operation, make the crawler track and the cliff or the road shoulder at a right angle, and place the bulldozer in the front.

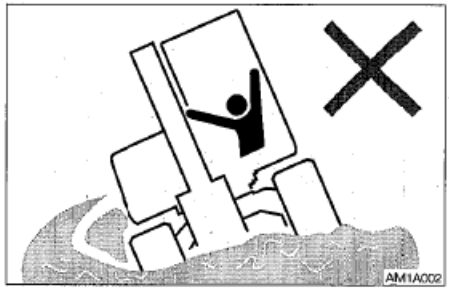

Do not enter the soft ground area. Doing so may cause the machine to tilt due to its own weight, leading to overturning or sinking into the ground.

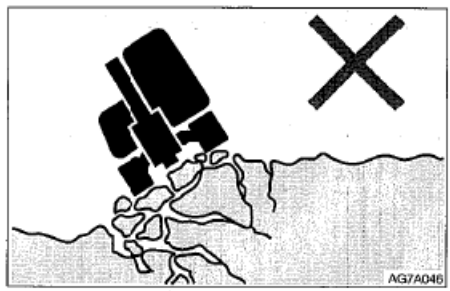

Do not approach unstable ground (cliffs, road shoulders, deep trenches). If the ground collapses due to the weight of the machine or vibration, there may be a danger of the machine falling or overturning. Remember, the soil is not strong after heavy rain or blasting.

The ground on the top of the embankment and around the top of the excavated ditches is also not strong.

Precautions when operating

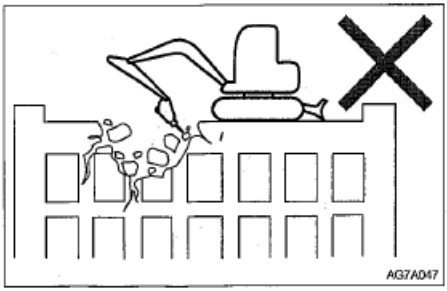

Do not disassemble under the machine. As the ground becomes unstable, there may be a danger of the machine falling.
When working on or from the top of a building or other structure, check the strength and structure before operation. If a building or structure collapses, it can cause serious injury or damage.

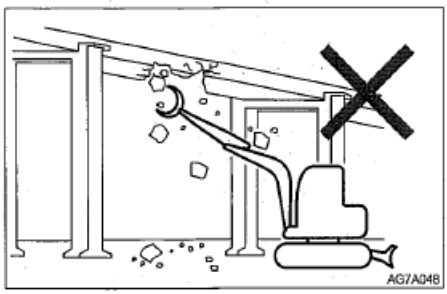

When disassembling, do not disassemble on the top of your head. There is a danger that the damaged part will fall or the building will collapse, causing serious injury or damage.

Do not use the impact force of the bucket to carry out demolition operations. There is a risk of serious injury due to flying material fragments and damaged bucket operating devices.

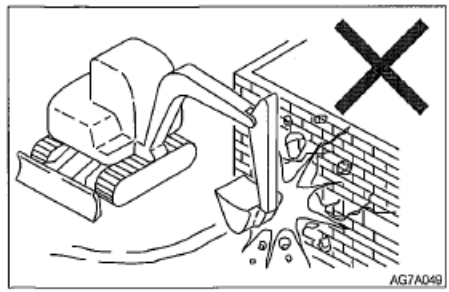

It is dangerous to operate on slopes

When operating on slopes or ramps, turning or operating working devices may cause the machine to lose stability or overturn. Try to avoid operating on slopes.

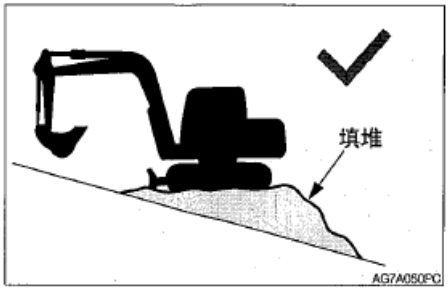

Leveling work area

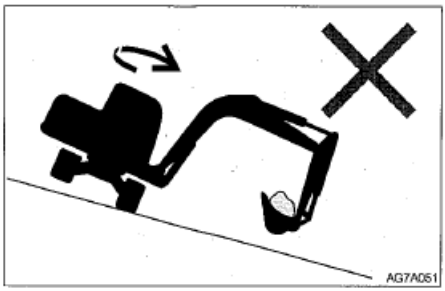

When the bucket is full of material, avoid turning downhill. This will reduce the stability of the machine and may cause overturning.

Please pay attention to the objects above your head

When operating under a bridge, in a tunnel, near a cable, or indoors, be careful not to hit the overhead object with the boom or stick.

When the bucket is heavily loaded, do not turn sideways (swing)

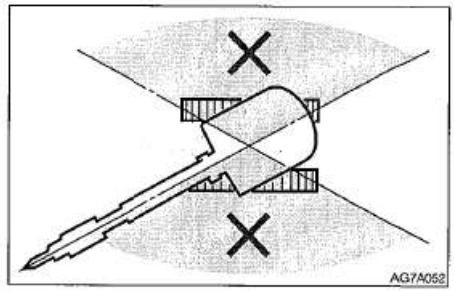

The machine is easier to overturn in the horizontal direction than in the vertical direction.

When there is a heavy load at the end of the bucket, do not swing (swing) sideways. Especially do not turn sideways (swing) on slopes.

When the machine is equipped with a breaker, shredder or long stick, the end of the attachment is heavier than with a standard bucket. For such machines with heavier ends, do not move the stick (boom) downhill for excavation or sideways operation.

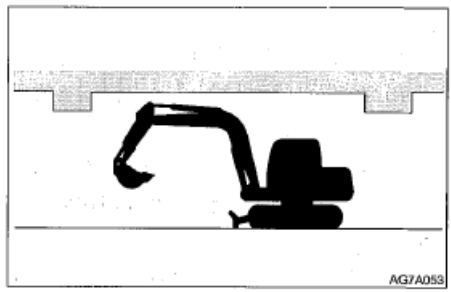

Excavators are not designed for hoisting

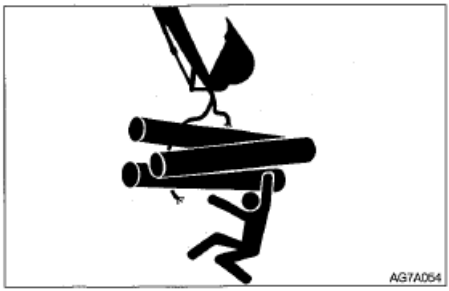

This machine is specially designed for excavation work. Therefore, it has no safety devices for crane operations. If the excavator is used for hoisting operations, special care should be taken.

Do not overload the hoisting. Overloading can cause the machine to overturn, causing serious injury or death.

All rated lifting capacities are based on using the machine on a stable and level ground. For safe hoisting operations, users are expected to leave a proper margin for specific working conditions. They include soft or uneven ground, non-level conditions, lateral loads, dynamic or sudden loads, hazardous environments, and personnel experience. Before operating the machine, the operator and other personnel should be very familiar with the operation manual, and should strictly abide by the safety operation regulations of the equipment at all times.

If the chain or lifting device is not connected properly, the bucket linkage or lifting device may fail, resulting in serious injury or death.

When using this machine as a crane, do not try to pull out the stump from the ground. The load acting on the machine in this application is completely unknown.

Do not allow anyone to stand on or under the hoisted object, or approach the work area.

Please pay attention to flying objects

This machine is not equipped with protective equipment to protect the operator from flying objects. Do not use this machine in dangerous places where the operator may be hit by flying objects.

Precautions when towing

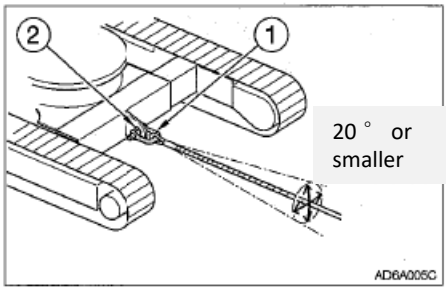

When towing, improper operation, incorrect use of cables, or improper inspections can cause serious injury or death.

It is dangerous if the cable breaks or splits. Use a wire rope that matches the traction.

Do not use kinked, twisted or damaged cables.

Do not suddenly put a heavy load on the rope.

When handling the rope, wear safety gloves.

Make sure that there is an operator on the towing machine and the machine being towed.

Do not tow on slopes.

When towing, no one should approach the rope.

Please refer to the section "Towing" for more information on instructions.

Operate the machine with the maximum track width

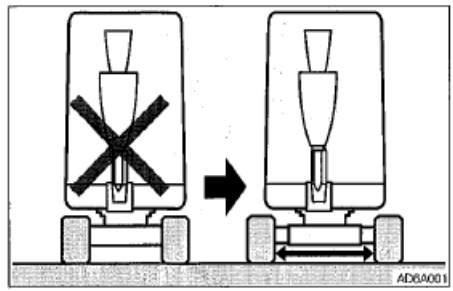

When configuring a retractable chassis, always operate the machine at the maximum chassis width of 1380 mm in order to maintain the stability of the machine to the greatest extent. If the machine is operated when the chassis is shrunk to its narrowest width (1140 mm), the machine may tip over due to its poor stability.

If the machine must be operated with a narrow width chassis (1140 mm), the working device should be stowed, the boom should be lowered to lower the center of gravity, and the machine should be kept facing the front before walking.

Precautions when stopping

Safe parking

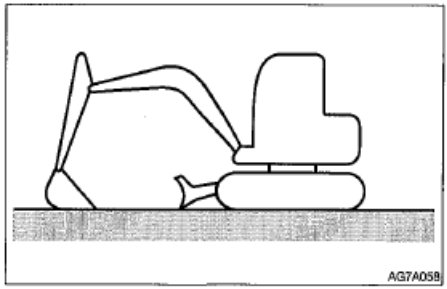

- Park the machine on a level, firm and safe ground. Set the parking device.

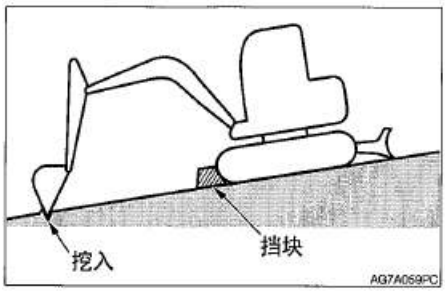

- If you must park or tilt the machine on a slope, park the machine firmly and prevent it from moving.
- When parked on the street, grilles, warning signs, lights, etc. should be used to make the machine easy to see even at night and avoid collisions with other vehicles.

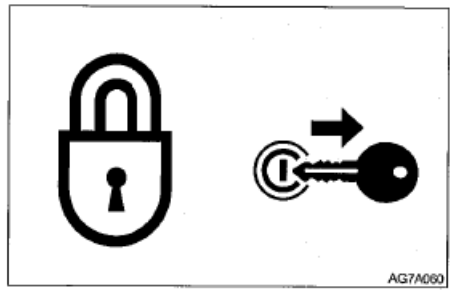

- Before leaving the machine, do the following: Lower the bucket and dozer to the ground. Raise the safety lock lever to the locked position. Stop the engine and remove the start key. Lock the cab and cover, and take the key.

Precautions when transportation

Safe loading and unloading of machines

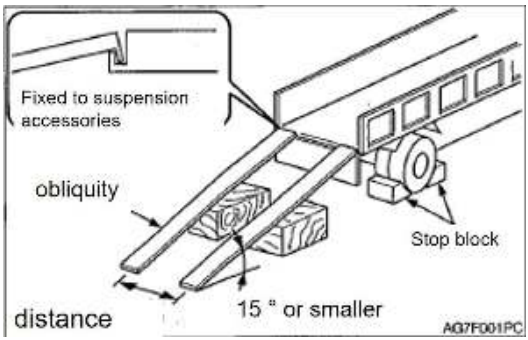

During loading and unloading, the machine may overturn or fall. Please take the following safety measures: Choose a solid and level ground and keep a sufficient distance from the road shoulder. Fix a slope of sufficient strength and size to the truck bed. The slope of the slope must not exceed 15° .

If the slope is bent down too much, please use pillars or pads for support. Never use working devices to load or unload the machine. Doing so may cause the machine to overturn or fall. Keep the truck compartment and the loading slope clean, free of oil, ice, snow, and other foreign objects to prevent the machine from sliding. Clean the tracks. Cock the wheels of the transporter to prevent movement. When loading and unloading the machine, please follow the signal of the signalman and walk slowly at a low speed. It is not allowed to change the course on the slope. Do not turn/swing on an inclined surface. The machine may tip over.

When turning/swinging on a truck, the footing may not be stable enough, so proceed slowly. If possible, lock the cab door after loading. Otherwise, the door may open during transportation. Use wedges to secure the track, and then use cables or chains to fasten the machine to the truck compartment.

Precautions when transportation

Safe hoisting machine

Master and use correct lifting gestures. Check the lifting equipment every day to see if any parts are damaged or missing, and replace if necessary. When hoisting, please use a cable that can lift the weight of the machine. Follow the procedure described to hoist the machine. Do not operate in any other way, otherwise it may cause the machine to become unbalanced. Please refer to the section "Hoisting the Machine" for more instructions. Do not hoist when there are operators on the machine. When hoisting, please proceed slowly to prevent the machine from overturning. Keep all personnel away from the work area when hoisting. Do not move the machine above people's heads.

Safe transport of machines

When transporting the machine, you should understand and follow the applicable safety regulations, vehicle codes, and traffic rules. The length, width, height and weight of the transport truck after loading the machine should be considered to select the best transport route. Do not start or stop suddenly or drive at high speed during transportation. Otherwise, the loaded machine will move or lose its balance.

Precautions for Maintenance

Warning Information of "No Operation" Sign

During the checking or maintenance of machine, the start of engine or the touch of any joystick by non-authorized personnel will probably result in serious injury accidents.

Before maintenance, please stop the engine and withdraw and carry the key.

Affix warning information "No Operation" to an eye-catching place such as starter switch and joystick.

Use of Correct Tools

Do not use any damaged or deteriorated tool or any tool designed for other application. Use tools suitable for related operations.

Periodically Replaced Critical Safety Parts

Replace the fuel hoses periodically. The fuel hoses will wear gradually along with time, even if no wear symptom is visible.

Upon detection of any wear symptom, replace the fuel hose, regardless of the replacement schedule.

To understand more details, please refer to the section "List of Critical Safety Parts".

Explosion-Proof Lamps

While checking the fuel, lubricating oil, coolant, and battery electrolyte, please use explosion- proof lamps to prevent fire and explosion. Otherwise, it will probably result in explosion to cause serious injury accidents.

Precautions when maintenance

Always keep the machine clean

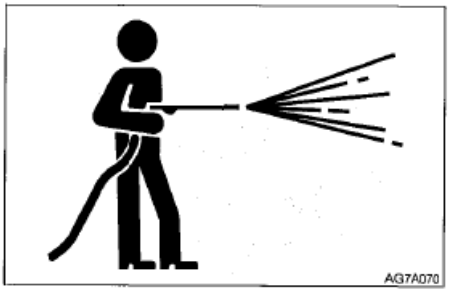

Please clean the machine before maintenance

Turn off the engine before cleaning the machine. Cover the electrical parts to prevent water from entering. Water in electrical components may cause short circuits or malfunctions. Do not clean the battery, electronic control components, sensors, connectors or cab with water or steam.

Turn off the engine before maintenance

When the machine is running, or when the machine is not running but the engine is running, avoid lubricating or continuing to adjust the machine.

If maintenance must be performed while the engine is running, two people should be arranged to work in a team and maintain communication with each other.

One person must sit in the driver's seat so that the engine can be turned off immediately if necessary. This person must pay special attention not to touch the control lever or pedal, except when needed.

The other person performing maintenance needs to keep his body or clothing away from the moving parts of the machine.

It is strictly forbidden to enter by unauthorized persons

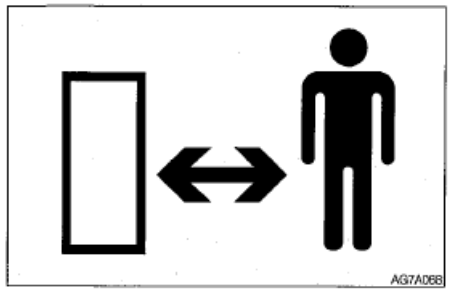

During operation, do not allow unauthorized personnel to enter the work area. Please be careful when grinding, welding or using a hammer. You may be injured by flying debris from the machine.

Work area preparation

Choose a stable and flat work area. Ensure proper lighting conditions. When working indoors, ventilation should be ensured.

Remove obstacles and dangerous goods. Eliminate slippery areas.

Keep away from moving parts

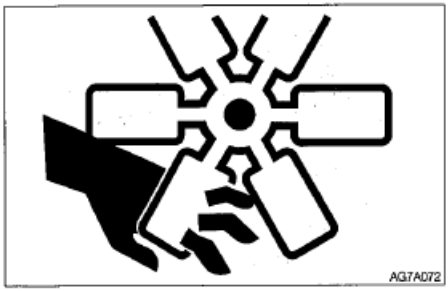

Keep away from all rotating and moving parts. If a hand or tool gets stuck in a rotating or moving part, it may cause serious injury or even death.

If tools or other objects are thrown or inserted into the fan or fan belt, these objects will be smashed or shredded. Do not throw or insert anything into the fan or fan belt.

Firmly fix the machine or any parts that may fall

Before performing maintenance or repairs under the machine, all movable working devices should be lowered to the ground or in the lowest position.

Fix the track.

If you must work under a lifted machine or equipment, always use wooden blocks, jacks or other strong and stable supports for fixing. Before it is firmly supported, it should not be under the machine or working equipment. This procedure is especially important when working with hydraulic cylinders.

Stabilize working devices

To prevent accidental movement of the machine when repairing, replacing bucket teeth or side teeth, the working device should be firmly fixed.

Hold the engine cover firmly when you open it

Before working inside the machine, be sure to fix the engine cover. Please keep the engine cover or cover closed in windy weather or when the machine is parked on a slope.

Place heavy objects in a stable position

In the process of disassembly or installation, when you need to temporarily place heavy objects or accessories on the ground, be sure to place them in a stable place. Keep unauthorized persons away from places where such items are stored.

Precautions for refueling

No smoking or open flames are allowed when refueling or near the refueling point.

When the engine is running or has not yet cooled down, do not remove the fuel tank cap or refuel. Do not spill fuel on the hot surface of the machine.

Fill the fuel tank in a well-ventilated area.

Do not fill up the fuel tank. There should be room for oil expansion.

Spilled fuel should be wiped clean immediately.

Tighten the fuel tank cap securely. If the fuel tank cap is lost, only use the original cap to replace it. Using an unauthorized and poorly ventilated fuel tank cap will cause internal pressure in the fuel tank.

Do not use fuel for cleaning.

Use the corresponding fuel according to the season.

Handling of hoses

Leaking lubricating oil or fuel can cause a fire.

Do not twist, bend or hit the hose.

Do not use twisted, bent or cracked pipes, metal pipes or hoses; otherwise, bursts may occur.

Retighten the loose joint.

Be careful when handling high temperature and high pressure parts

Please turn off the engine and wait for the machine to cool down before performing maintenance.

The engine, exhaust pipes, radiators, hydraulic pipes, sliding parts and many other parts of the machine are very hot when the engine is just turned off.

Touching these parts can cause burns.

Engine coolant, hydraulic oil, and other oils are also under high temperature and pressure.

Be careful not to touch the hydraulic oil when loosening the engine cover or plug.

Operating the machine in this situation may cause scalding or injury due to the spray of hot oil.

Be careful when handling high temperature and high pressure parts

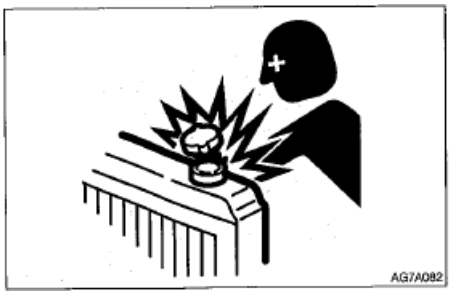

When the cooling water is hot, do not remove the radiator cap or drain plug. Turn off the engine and wait until the engine and cooling water cool down. Then slowly loosen the radiator cap to relieve the internal pressure, and then remove it.

Be careful of hydraulic oil internal pressure

After the engine is turned off, the pressure in the hydraulic tubing will be maintained for a long time.

The internal pressure should be completely relieved before maintenance operations.

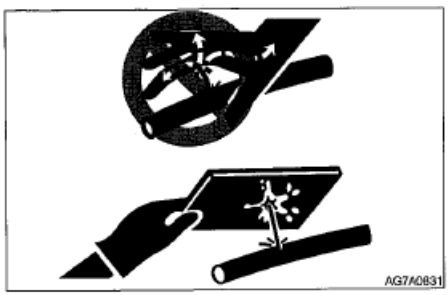

The high pressure of hydraulic oil can pierce the skin or eyes, causing serious injuries, blindness and even death. Remember that the hydraulic oil seeping from the small hole is almost invisible to the naked eye. When checking for leaks, wear goggles and thick gloves, and use cardboard or plywood to protect your skin to prevent damage from the hydraulic oil spray.

If hydraulic oil soaks into the skin, it must be removed surgically by a doctor familiar with such injuries within a few hours.

Before working on the hydraulic system, release the pressure

Before the hydraulic system is depressurized, if the cover or filter is removed or the pipe is disconnected, hydraulic oil may be sprayed.

- Loosen the vent plug slowly to relieve the pressure in the fuel tank.
- When removing a plug or screw or disconnecting a hose, stand on one side and loosen it slowly to gradually release the internal pressure before removing it.
- The oil or oil plug may be sprayed out due to the pressure in the oil tank of the traveling motor. Please loosen the oil plug slowly to release the internal pressure.

Beware of high-pressure grease

In the track tensioner, grease is injected under high pressure. If you do not follow the procedures specified below when adjusting the tension, the grease relief valve may fly out and cause injury.

- Never loosen grease fittings.
- Slowly loosen the grease relief valve. Do not turn it more than one revolution.
- Do not put your face, arms, legs or body in front of the grease relief valve.
- If no grease flows out when the grease relief valve is loosened, the valve is malfunctioning. Please contact Kenshi Heavy Industries service agent for repair.

Do not disassemble the track tensioner

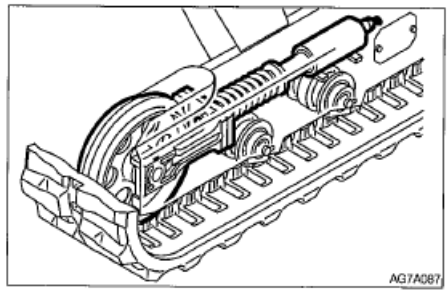

The track tensioner is equipped with a powerful spring. When the cover belt tensioning device is accidentally disassembled, the spring will pop out, causing serious injury. Do not disassemble the cover tape tensioning device.

Be careful of flying debris when using a hammer

When using a hammer, pins or metal chips may splash around. This may cause serious injury.

- When hitting hard metal parts such as pins, bucket teeth, side teeth or bearings with a hammer, please wear protective equipment such as goggles and gloves.
- When hitting pins or bucket teeth, make sure that no one is around.

Operating accumulator

Be careful when handling high-pressure nitrogen stored in the accumulator. If not handled properly, the nitrogen gas may explode and cause serious injury. Please strictly observe the following safety measures:

- Do not disassemble it.
- Do not approach an open flame or throw it into a fire source.

- Do not drill, weld or melt it.
- Do not subject it to physical shock, such as knocking, rolling or dropping.
- Before processing the tank, the sealing gas must be discharged. If you need help, please contact Ken Stone Heavy Industry Service Agent.

Precautions when maintenance

Disconnect the battery cable

Please disconnect the battery cable before performing electronic system work or electric welding. Disconnect the negative (-) cable first. When reconnecting, connect the negative (-) cable last.

Be careful when handling the battery

●The battery contains sulfuric acid, which can damage the eyes or skin if touched accidentally. If it gets into eyes accidentally, rinse immediately with clean water and seek medical attention immediately. If swallowed accidentally, drink plenty of water or milk and seek medical attention immediately. If the sulfuric acid touches the skin or clothes, wash it off immediately with plenty of water.

●Wear goggles and gloves when handling the battery.

●The battery can generate flammable hydrogen gas, which may cause an explosion. Keep away from fire sources such as open flames, sparks or lighted cigarettes.

●When checking the electrolyte level, use a flashlight.

●Before checking or disposing of the battery, make sure to turn off the start switch to stop the engine.

●Be careful not to let metal tools or any metal objects touch the electrodes and cause a short circuit.

●An electric spark will be generated when the electrode is loose. Be sure to tighten it.

●Make sure that the battery cap is securely closed.

●When the battery is frozen, do not charge or start the engine across; otherwise, an explosion may occur. Heat the frozen battery to 15C before use.

●Do not use the battery when the liquid level is below the lower limit. Otherwise, it will accelerate the internal aging of the battery and shorten the battery life. It can also cause rupture (explosion).

●Do not add distilled water above the upper limit. Otherwise, the electrolyte will leak out. Contact with the liquid can damage the skin or corrode machine parts.

●Clean the area around the electrolyte level line with a damp cloth and check the level. Do not clean with a dry cloth; otherwise it may cause static electricity to accumulate, burn or explode.

Regular replacement of safety-critical components

●To ensure that the machine can be used safely for a longer period of time, regular refueling, inspection and maintenance should be carried out. To improve safety, please replace safety-critical parts such as hoses and seat belts regularly. For more details, please refer to the "Regularly Replaced Safety Critical Parts" section.

●Regularly replaced safety-critical components" refer to components that are aged, worn and functionally degraded after repeated use, and the performance of such components will change over time. These characteristics of such components may cause serious mechanical damage or Personal injury, and it is difficult to judge the remaining service life based on visual inspection or operating feel.

●Once any damage is found during visual inspection of its appearance, please replace the "regularly replaced safety-critical components", even if the specified replacement interval has not been reached.

Use battery charging cable to jump start

●When using the battery charging cable to start the engine, be sure to connect the cable according to the correct steps below. Incorrect cable connection can cause discharge and battery explosion.

●Don't let the "problem machine" and the "rescue machine" touch each other.

●Do not connect the positive (+) and negative (-) clamps of the battery charging cable together or touch the machine.

●When connecting, first connect the positive pole of the battery charging cable to the positive (+) terminal. When disconnecting, first disconnect the negative cable from the negative (-) terminal (grounding terminal).

●Be sure to connect the cord clamp securely.

●Connect the last clip of the battery charging cable to a place as far away from the battery as possible.

●When using the battery charging cable to start the engine, you should always wear goggles and gloves.

●Use battery charging cables and clamps that are sized for the battery capacity. Do not use damaged or corroded battery charging cables and clamps.

●Make sure that the battery of the "rescue machine" has the same capacity as the battery of the "problem machine".

Please entrust Ken Stone Heavy Machinery Service Agent for welding repair

When welding operations must be performed, qualified personnel must do it in a well-equipped workplace. In order to prevent damage to any part of the machine due to excessive current or electric sparks, please observe the following matters.

●Disconnect the battery wiring before welding.

●Do not continuously apply a voltage of 200V or more.

●The grounding point must be connected within 1 meter from the welding part. Do not connect the ground terminal near the electrical control device/instrument or connector.

●Ensure that there is no seal or bearing between the welding part and the ground terminal.

●Do not connect the ground terminal around the pin or hydraulic cylinder of the working device.

●When welding the machine body, disconnect the connector of the electric control device before the operation.

Vibration experienced by the operator

The test results of the vibration transmitted by the machine to the operator show that the operator's upper limb vibration is lower than 2.5 m/s², while in the seat part, the body vibration is lower than 0.5 m/s².

Vibration and ear noise:

A-Weighted emission sound pressure level at the operator's position measured according to work cycle procedures specified in “ISO 6396 “ is 78dB(A),

The hands and arms are exposed to a weighted root mean square acceleration that is less than 2.5 m/s2.

The body is exposed to a weighted root mean square acceleration that is less than 0.5 m/s2.

Mesurements are obtained on a representative machine using the procedures in the following standards:

"ISO 2631-1"

"ISO 5349-1"

"ISO 5349-2"

Inspection after maintenance

●Slowly increase the engine speed from low idle speed to the fastest speed, and check if there is any oil or water leaking from the repair parts.

●Operate the control levers to check whether the machine is operating normally.

Waste disposal

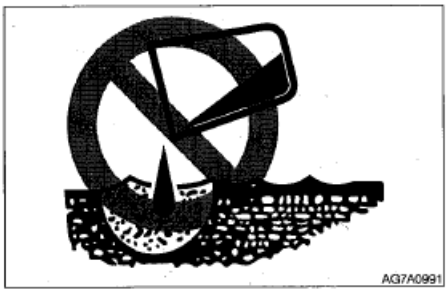

●Be sure to collect the waste oil discharged from the machine in a container. Improper disposal of waste oil can cause harm to the environment.

●When handling hazardous materials such as lubricating oil, fuel, coolant, solvents, filters, and batteries, please follow applicable laws and regulations.

Disposal of hazardous chemicals

Direct contact with hazardous chemicals can cause serious injuries. Hazardous chemicals used in this machine include grease, battery electrolyte, coolant, paint and adhesives. Please handle hazardous chemicals carefully and properly.

Safety signs

In order to ensure the safety of operators and workers around the work area, the following safety signs (marks) should be placed on certain parts of the machine. Carry this manual and walk around the machine to check the content and placement of these safety signs. Review these signs and operating instructions in this manual with your machine driver.

●Safety signs should be kept clean, clear and easy to identify. If any safety label falls off or becomes damaged or becomes illegible, replace it with a new label. Please provide your product serial number when ordering a new label from a Kenshi Heavy Industry service agent.

●When parts with safety labels are replaced, new labels should be posted on the new parts.

Safety signs

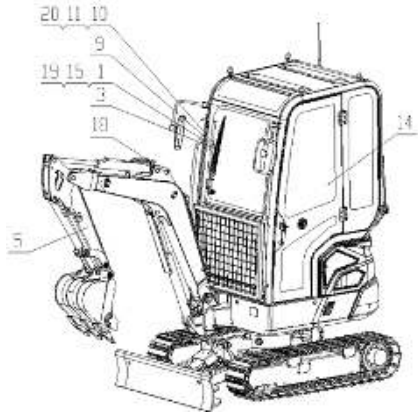

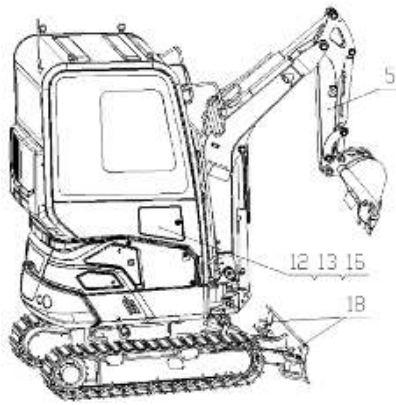

Safety signs

1. Warning

Read and understand the manual carefully before operating, inspecting, and servicing the machine.

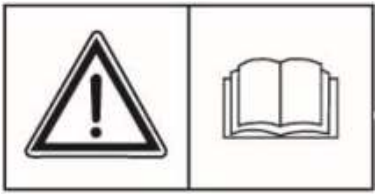

2. Safety distance

Do not approach or stand in the working area of the machine.

3. The danger caused by the bottom bolts flying out of the weight adjuster. To ensure safe and correct operation, be sure to read the operation manual before adjusting the weight adjuster.

5. Safety distance
Danger caused by hitting the working device.
Keep away from the machine during operation.

4. For risks caused by rotating parts, please shut down before inspection and maintenance.

6.

This symbol indicates that contact with heated parts such as engines, pumps, or exhaust pipes during operation or just after the operation may cause them to be uncooled.

7.

This symbol indicates that getting involved in the steering belt can cause a risk of injury. During maintenance or repair work, make sure that it stops rotating completely.

8、

This symbol indicates that if the radiator or hydraulic oil tank is opened when it is not cold, there may be a risk of burns due to the hot water or oil sprayed out.

Let the radiator or hydraulic oil tank cool down before opening the cover.

9. Maximum side angle 10°

Please pay special attention when crossing slopes and operating on uneven ground. If the side angle is greater than 10° , the machine will roll over. When operating the machine, always adjust the chassis to the maximum width. When the chassis is at the narrowest width, it is only used when crossing narrow passages.

10. Warning

1. If you use incorrect methods to operate or maintain this machine, it will cause physical injury or death.
2. Before operating the machine, be sure to read and understand the operation manual that comes with the machine.
3. Ensure that all safety facilities are in place and effective.
4. Before operating the machine, please wear a seat belt.

11. Warning

If a bucket that is wider than the standard is installed on the machine, the cab may be damaged when the cantilever is at the maximum left deflection position.

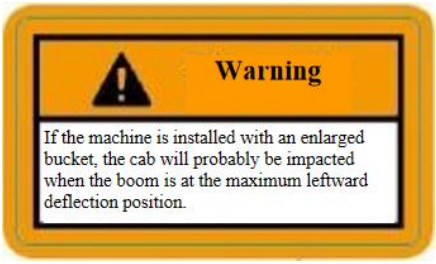

12. Attention

The hydraulic oil tank must maintain a certain pressure to prevent damage to the pump.

See the instructions on the operating manual

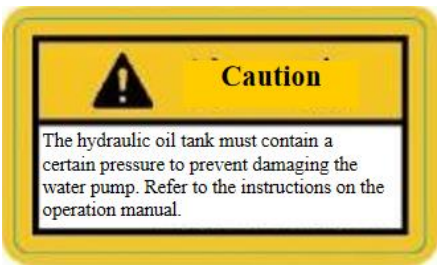

13. Diesel

14. It is strictly forbidden to support the operating handle and walking joystick when getting on and off the vehicle, otherwise it will cause damage to the parts.

15. Risk of electric shock

There is a risk of electric shock when handling cables.

16. Hydraulic oil

17. Fixed point

18. Lifting direction

19. Safety measures when the machine is lifted

When the machine is raised, fix it with pads or supports.

Do not work under the lifted machine when the machine is not fixed with any support.

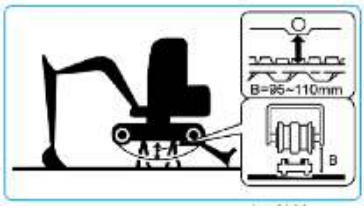

20. Keep a certain distance between the boom and the bulldozer.

When the boom is lowered, be careful not to let the boom touch the blade.

CONTROL

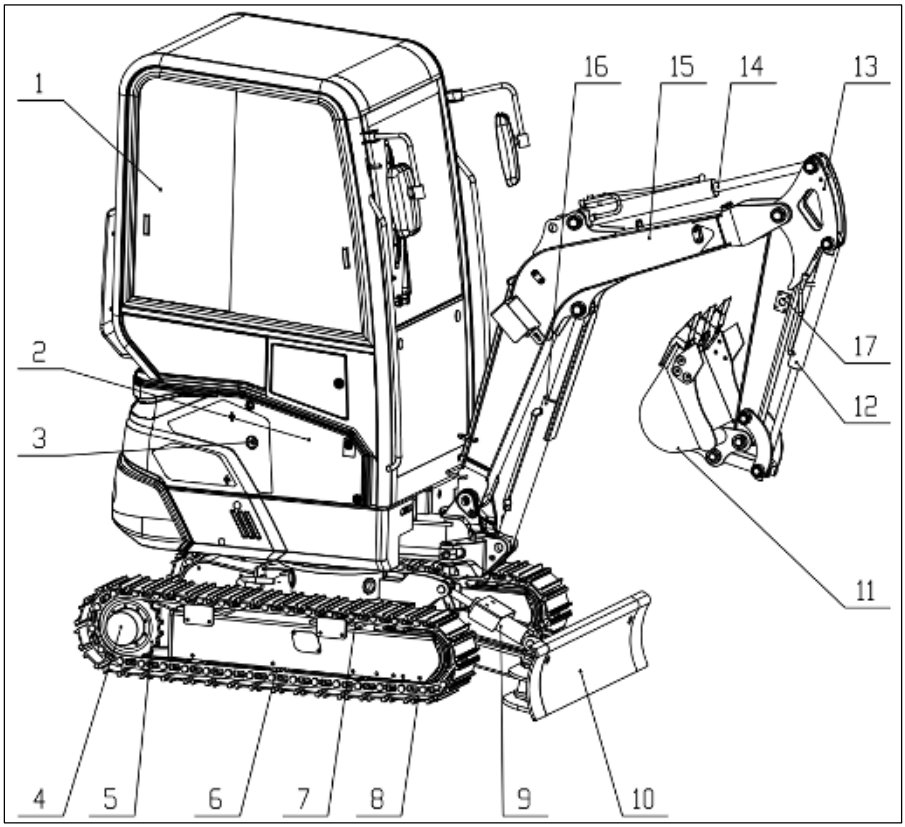

Upper frame

1. Cab
2. Diesel tank
3. Hydraulic oil tank

Chassis

4. Walking motor
5. Drive wheel
6. Track rollers
7. Drag chain board
8. Track

Working device

9. Bulldozer cylinder
10. Push shovel
11. Bucket
12. Bucket Cylinder
13. Stick
14. Arm cylinder
15. Boom
16. Boom cylinder
17. Spare oil circuit

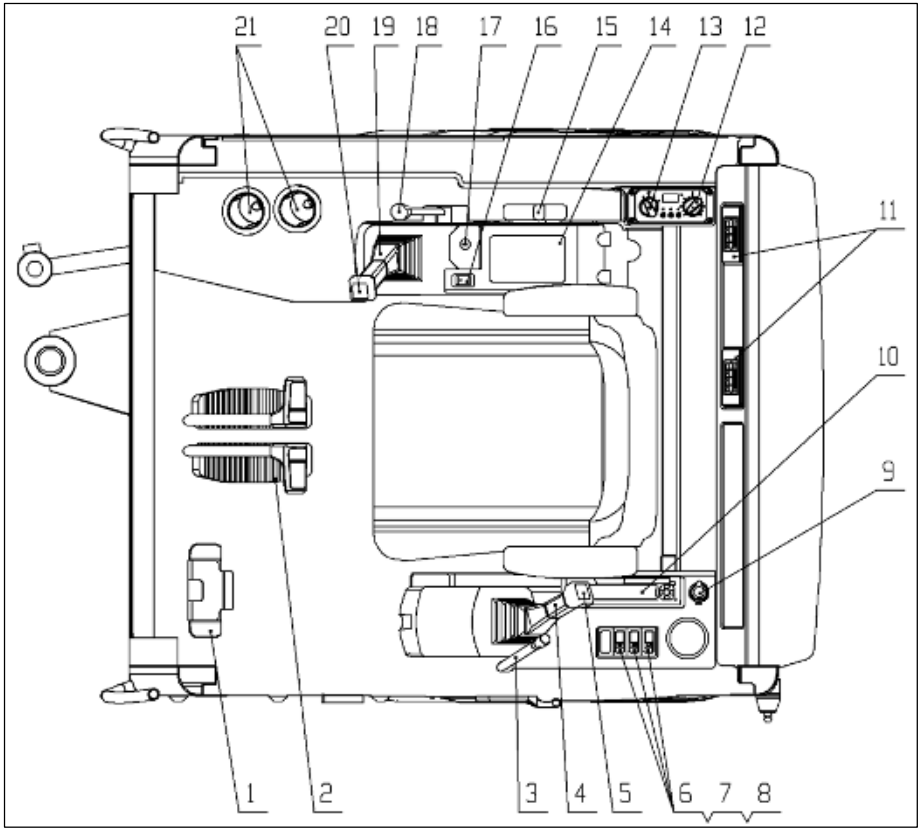

1. Swinging head pedal
2. Walking pedal
3. Safety lock control lever
4. Left joystick
5. Crushing control button
6. Glass water switch
7. Wiper switch
8. Headlight switch
9. Cigarette lighter holder
10. Radio adjustment panel
11. Rear air outlet
12. Temperature adjustment knob
13. Wind speed adjustment knob
14. Instrument panel
15. Front shovel operating handle
16. High and low speed switches
17. Start switch
18. Throttle adjustment lever
19. Right joystick
20. Horn button
21. Front air outlet

Start key

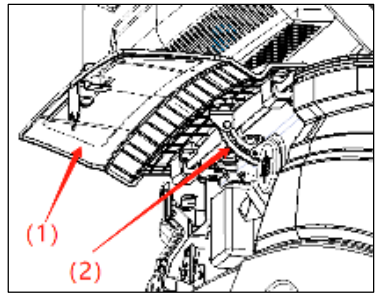

The starter key is used to start the engine.

Repair cover

Warning

When opening the cover, make sure that the safety lock lever is in the locked position and the engine is stopped.

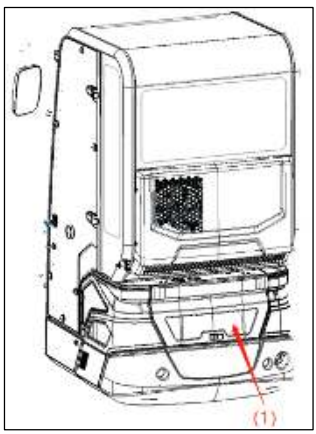

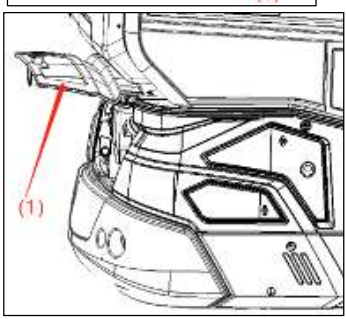

open

Insert the key and turn counterclockwise to unlock the rear access cover (1).

Press and hold the lock cylinder, hook the lock handle with your fingers, lift the rear access cover to the highest point, and when the limit shaft gets stuck in the slot of the limit plate, drop the rear access cover. The limit plate (2) will automatically lock the rear access cover, ensuring that the access cover does not fall.

Close

Lift the rear access cover (1), manually lift the limit plate (2), so that the slot of the limit plate disengages from the limit shaft, while lowering the rear access cover, close the access cover (1).

Insert the key and rotate clockwise to lock the access cover (1).

Fuse box

The box is used to protect the power system from overcurrent.

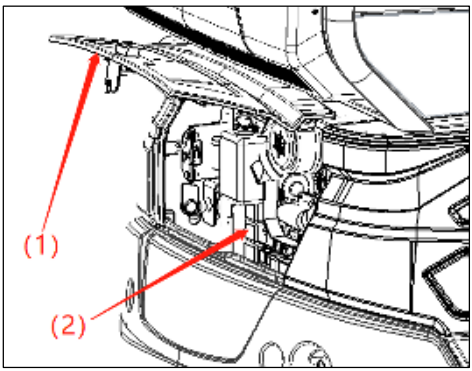

Open the rear access cover (1) to see the fuse box.

open

Open the rear access cover (1);

While pushing the tab next to the fuse cover, pull on the fuse cover (2).

Close

Push in the fuse cover (2) until the tab clicks into place.

Close the rear access cover (1).

Left access cover

open

1. Open the rear maintenance cover (1) (refer to the steps for opening the rear maintenance cover);

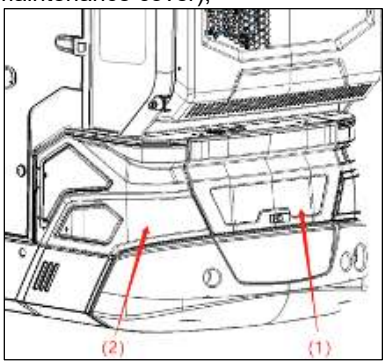

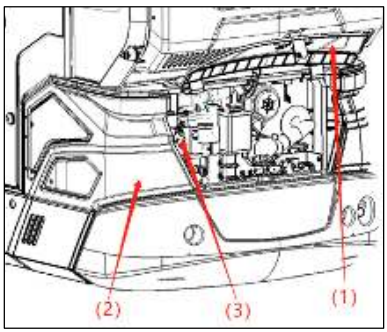

2. Press down on the side door lock position (4) with the right hand to unlock it, while pulling outward with the left hand to open the left door (2). Once the locking tongue slot disengages from the lock shaft, release the fingers of pressing (4) and continue to open the left door to the maximum or desired position.

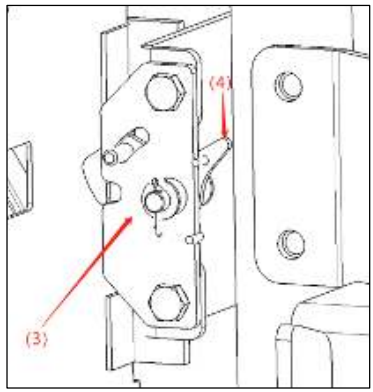

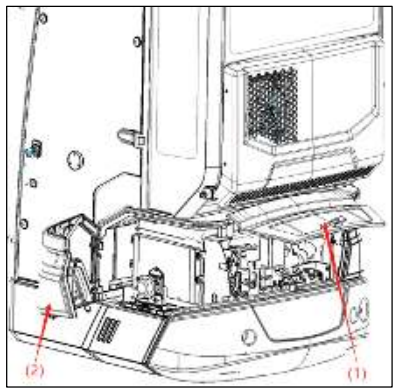

Close

1. Push the left door inward until you hear a "click" sound to close the left maintenance cover;

2. Close the rear access cover (1) (refer to the steps for closing the rear access cover).

Front inspection cover

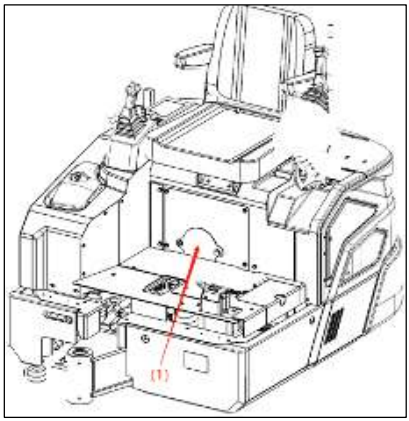

open

Rotate counterclockwise to loosen the fixing bolt (2);

Rotate counterclockwise to loosen the fixing bolt (3);

Rotate counterclockwise to open the front access cover (1).

Close

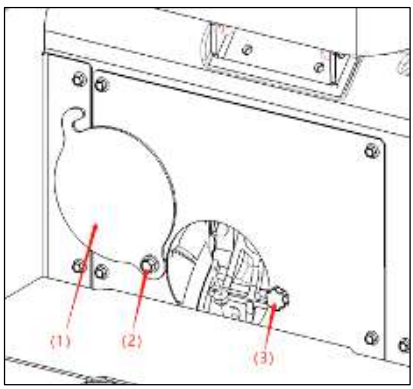

Rotate clockwise to close the front access cover (1);

Rotate the fastening bolts (2) and (3) clockwise in sequence。

Seat bracket/upper access cover

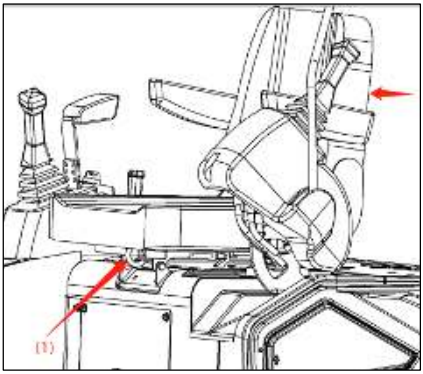

1. Hook your finger around the seat limit lever (1) and pull it forward forcefully. At the same time, hold onto the backrest of the seat and flip the seat forward.

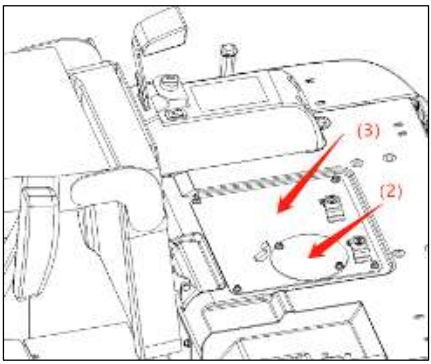

2. Rotate the two fixing bolts of the upper maintenance cover plate (2) counterclockwise to remove the upper maintenance cover plate. After removing the upper access cover, coolant can be added.
3. Rotate the four fixing bolts of the seat bracket (3) counterclockwise to remove the seat bracket. After removing the seat bracket, coolant and oil can be added.

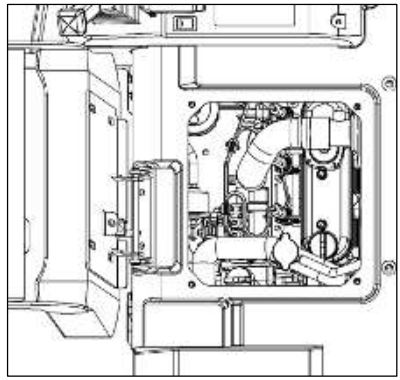

close

Install the seat bracket/upper maintenance cover plate and tighten the fixing bolts clockwise;

Hold the backrest of the seat and slowly flip the seat backwards until you hear a "click" sound, indicating that the seat has been locked by the limit lever. Please also check and confirm that the seat can no longer be moved.

Fuel cap/hydraulic cap

Caution

Be careful when opening and closing the fuel/hydraulic cap Stuck by the cover.

When adding fuel/hydraulic oil, please open this cover.

open

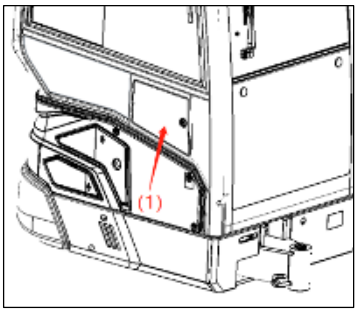

1. Insert the key and rotate counterclockwise to unlock and open the side door of the driver's cab (1);

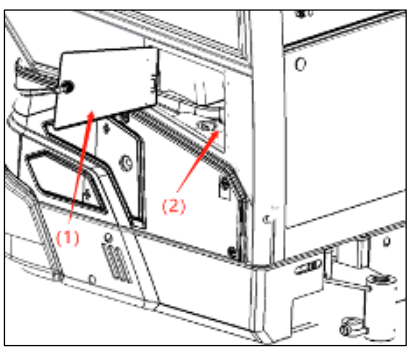

2. Insert the key and turn counterclockwise to unlock and open the upper cover (2).

oil filler

Warning

●When refueling the fuel tank/hydraulic tank, do not smoke and keep away from heat sources or open flames.
●The fuel tank should be refueled in a well ventilated area, and the engine should be turned off when refueling.
●Spilled fuel/hydraulic oil should be immediately wiped clean.
●Do not top up the fuel tank, there should be room for oil expansion.
●Tighten the fuel/hydraulic tank cap securely.

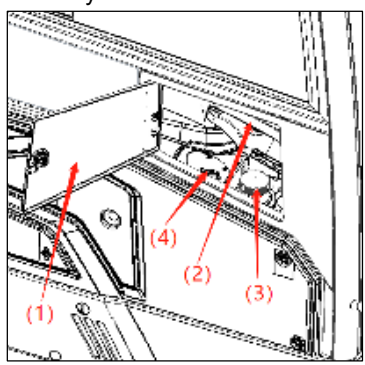

open

●Open the cab side door (1) and upper cover (2);
●Rotate the fuel tank cap (3)/hydraulic tank cap (4) counterclockwise and remove it;
●Add oil to the specified level.close
●Rotate the fuel tank cap/hydraulic tank cap clockwise, close it and tighten it;
●Close the upper cover (2) and the cab side door (1) separately and lock them.

cabin

cab door

Warning

●When getting up and down the cab, please first fully open the cab door until it is fixed in the latch, and at the same time, please check and confirm that the door can no longer be moved. Fully open the cab door and press the latch behind the door to secure it in place. Be sure to lock the door when getting on or off the machine and during operation.

Locking and unlocking

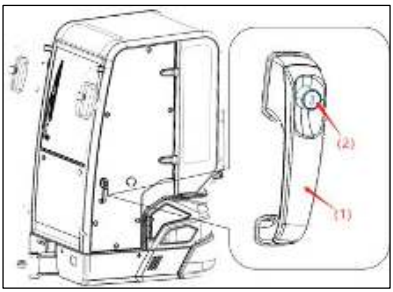

Insert the cab key into the lock cylinder (2) and rotate counterclockwise to unlock.

open

Grasp the door handle (1), press and hold the lock cylinder button (2) with your thumb, and pull the handle (1) forward to open the door;

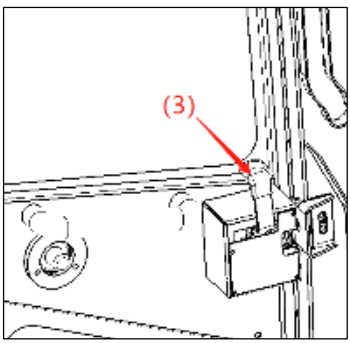

When opening the door from the cab, pull the door opener (3) backwards and push outward to open the cab door.

Fully open the cab door and press firmly against the cab to secure it in place.

close

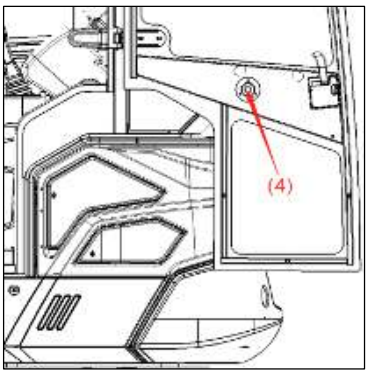

1. Press the release button (4);

2. Close the unlocked side door.

Emergency Exit

Front window (excluding machines with

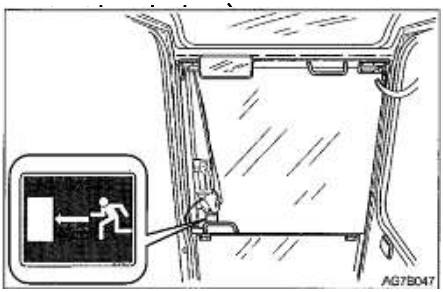

If trapped inside the driver's cab, please open the front window and get out.

front window

Warning

- When opening/closing the front window, tightly grasp the handle with both hands. If your hand slips off the handle, your head or hands may get stuck.
- When opening or closing the front window, it may approach the head, please be careful not to let the window touch the head.
- When you open the front window, be sure to lock it in place with the locking pins on the left and right sides. If it is not locked in place, the window may fall off.

open

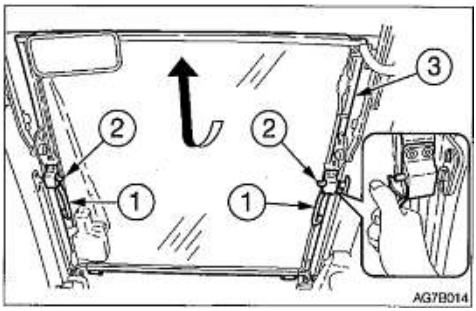

1. Park the machine on a flat surface and turn off the engine;
2. Turn the safety lock control lever to the locked position;
3. Grasp the left and right handles (1) and press the knob (2) with your thumb to unlock it;
4. Pull the front window (3) towards the front of you and lift it up at the same time;

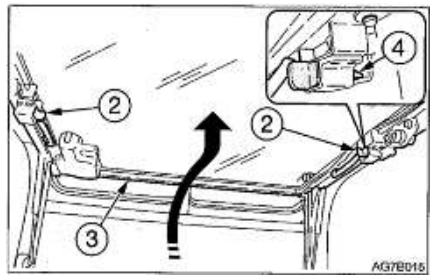

5. Release your thumb on the knob (2), then pull the front window (3) up fully and lock it with the locking pin (4).

close

Warning

When closing the front window, please operate it gently to avoid hitting your head. Sudden lowering of the front window may result in personal injury or damage to the front window.

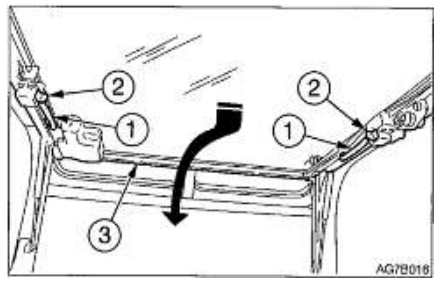

1. Grasp the left and right handles (1) and press the knob (2) with your thumb to unlock it;
2. Pull down on the front window (3), while sliding it forward and slowly lowering it;

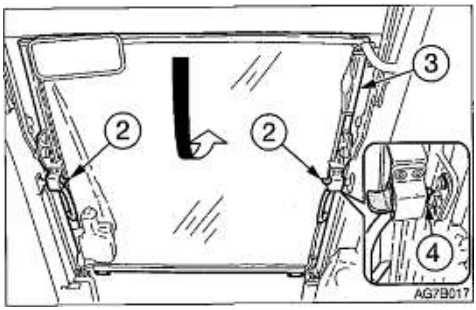

3. Release your thumb on the knob (2), then press the front window forward and lock it with the locking pin (4).

Lower front window

Disassemble

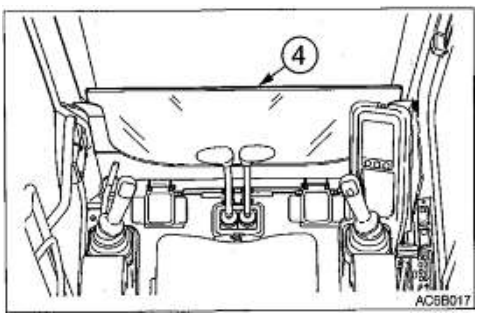

1. Open the front window and fold it towards the top of the cab;
2. Slowly pull up the front window glass (4) until it completely disengages from the slot;
3. Place in a safe location.

Side window

open

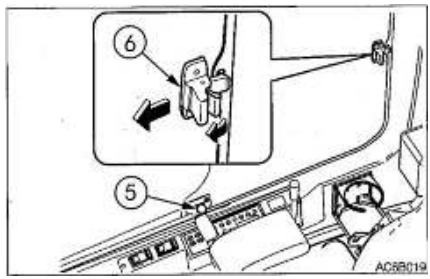

1. Rotate the locking bolt (5) counterclockwise to unlock;
2. Press and hold the latch (6) to release it and open the side window;
3. Rotate the locking bolt (5) clockwise to lock the side window.

CLOSE

1. Rotate the locking bolt (5) counterclockwise to unlock;
2. Close the side window until you hear a "click" sound, then turn the locking bolt (5) clockwise to lock the side window.

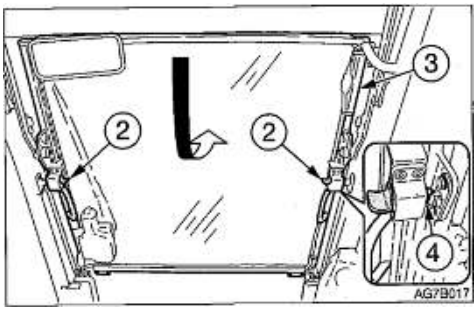

3. Release your thumb on the knob (2), then press the front window forward and lock it with the locking pin (4).

Lower front window disassembly

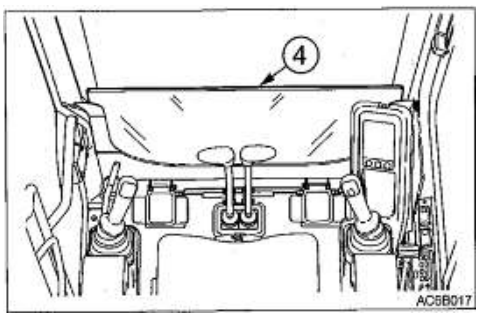

1. Open the front window and fold it towards the top of the cab;
2. Slowly pull up the front window glass (4) until it completely disengages from the slot;
3. Place in a safe location.

Side window

open

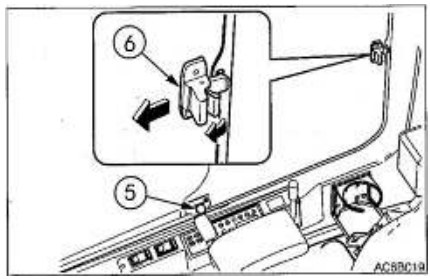

1. Rotate the locking bolt (5) counterclockwise to unlock;
2. Press and hold the latch (6) to release it and open the side window;
3. Rotate the locking bolt (5) clockwise to lock the side window.

close

1. Rotate the locking bolt (5) counterclockwise to unlock;
2. Close the side window until you hear a "click" sound, then turn the locking bolt (5) clockwise to lock the side window.

Safety hammer

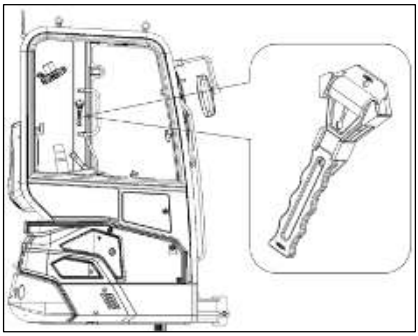

1. The purpose of installing a safety hammer is to escape from the driver's cab in emergency situations. When escaping, use a safety hammer to break through the window glass.

2. When using a safety hammer to break the window glass, please be careful not to let the glass fragments hurt yourself;

3. Remove glass fragments from the windowsill to prevent scratching oneself during evacuation. Broken glass can fall from the window, be careful where you stand and do not slide on the glass.

Seats and seat belts

seat

Warning

Adjust and secure the seat (if equipped with high-end seats)

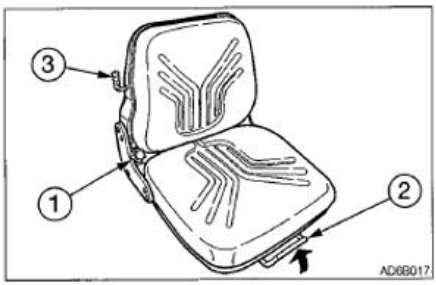

(A) Adjusting the seat angle

Stand up and sit back in the seat.

Adjust the backrest angle to the desired angle through the knob handle (1).

safety belt

警 告

Before starting the engine, please make sure to fasten your seat belt firmly.

Fasten seat belts

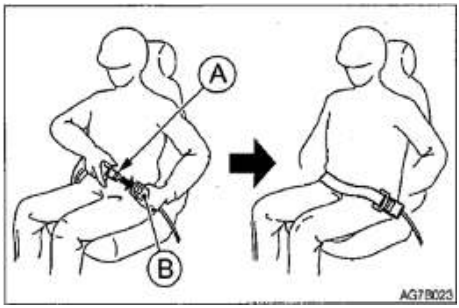

1.Adjust the seat to the desired operating position, sit straight on the seat and lean back.

2.Pull the seat belt to the required length.

3.Please ensure that the seat belt is not twisted, and then insert the seat belt tongue (A) into the buckle (B) until it locks into place with a "click" sound.

4.Please pull the seat belt to check if it is securely locked and place it around your waist.

Release the seat belt

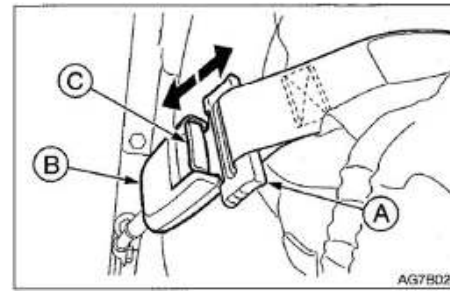

1. Grasp the seat belt tongue (A) and then press the button (C) on the seat belt buckle (B).

2. The seat belt automatically retracts to its starting position.

Records

Main interface

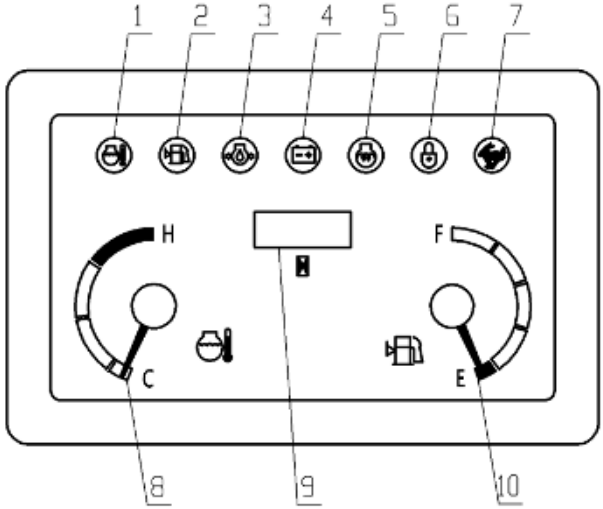

Function Description

Analog quantity display

No.	Function	Range	Alarm	Method	Display	Icon
1	Cooling water stability	40~120℃	≥105℃	Flashing+ Buzzing	Pointer display	
2	fuel level	0%~100%	≤10%	Flashing+ Buzzing	Pointer display	
9	working hours	0~99999.9 小时	N/A	N/A	Digital display	N/A

Switching value display

No.	Function	Alarm conditions	Alarm method	Icon Color	Icon
3	Oil Pressure	Ground before engine operation	No alarm	Not display	
		Ground after engine operation	Flashing+Buzzing	Red	
4	Charge	High level active (taking generator P)	Icon Display	Green	
5	Preheating indication	High level	Icon Display	Red	
6	Safety lock (reserved)	High level	Icon Display	Green	
7	High speed indication	High level	Icon Display	Red	

Cooling water temperature display

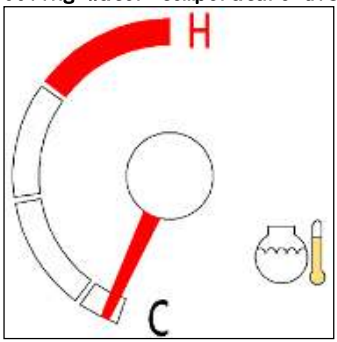

Display the current engine operating temperature. Light grid display allows for a more intuitive understanding of the temperature of the cooling water. If the pointer of the water temperature gauge is in the white area, it indicates that the water temperature is normal during the operation; If the pointer of the water temperature gauge is in the red area, it indicates that the water temperature is too high, and the engine water temperature alarm icon shows that the monitor emits an audible alarm. At this point, stop the engine immediately or reduce the engine speed to idle speed to check the condition of the cooling water. The water temperature parameters are read through CAN communication.

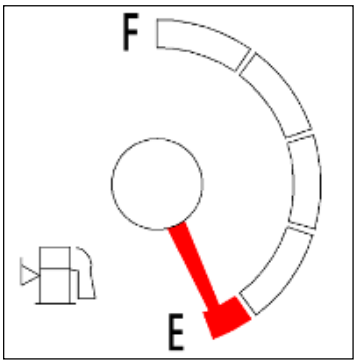

Indicates the amount of fuel in the fuel tank. If the pointer points to a white light grid, it indicates that the fuel level is normal during operation; If the pointer is in the red light grid, the fuel level alarm indicator flashes, and the monitor emits an audible alarm, it indicates that there is not much remaining fuel in the fuel tank and should be checked and refueled in a timely manner.

Pay attention to the following matters

This instrument is a waterproof instrument with stable performance, simple and elegant design. It is an intelligent instrument specially developed for small excavation. To ensure data stability and improve instrument life.

Please note the following:

1. Do not disassemble the instrument panel without permission.
2. Do not violently strike or seriously injure the instrument.
3. Avoid the occurrence of external injuries.
4. Keep the panel clean. If there are organic solvents such as diesel and gasoline or corrosive liquids, please wipe them clean in a timely manner to prevent corrosion of the panel.
5. If you are unsure during use, please contact the service personnel in a timely manner.

After sales service information

Under normal operation according to the instructions in the manual, if a malfunction occurs, it can be guaranteed free of charge during the warranty period.

When repairing this product, please bring a warranty to the local sales point for repair.

Repair costs will be incurred in the following situations:

1.In the absence of a guarantee letter.

2. Malfunctions caused by incorrect use of this machine or unauthorized disassembly, repair, or modification of this machine.

3. Malfunctions caused by users falling during transportation after purchase.

4. Faults caused by fire, earthquake, gas leakage, wind disaster, lightning, abnormal voltage, etc.

5. In the absence of any modification to the purchase time, customer name, or text in this manual.

Switch

Start switch

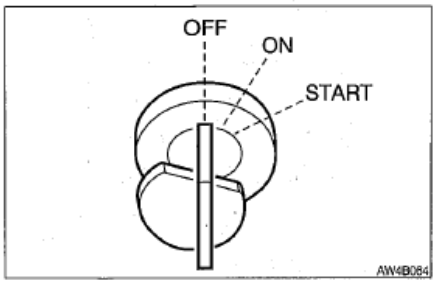

Important: Don't turn the starter key from OFF to ON and then from ON to OFF frequently and repeatedly, otherwise it may cause engine failure.

OFF……This position is used to stop the engine and to insert and remove the starter key.

ON…… Engine running position. In this position, all electrical installations are operating.

START …engine running position, turn the key to this position, start the engine, release the key, the switch will automatically return to the ON position.

When the coolant temperature is too low, turn the key counterclockwise before starting, hold it for 10-15 seconds, release it, and then return to the ON position to start the engine.

Whistle button

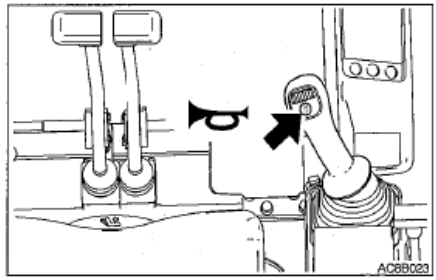

The whistle button is located at the top of the right joystick.

Press this button to whistle.

Walking high and low speed buttons

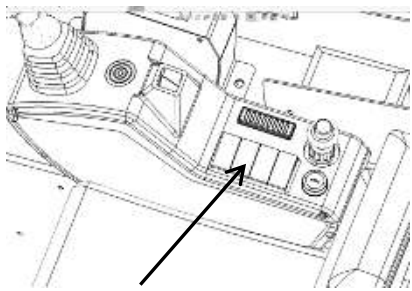

The high and low speed switch is located under the right operating handle bracket

1. When the indicator light is on, it means it is in a high-speed state.
2. It is in a low-speed state when it is not lit.

Rod and pedal

Safety lock control lever

Warning

- When standing up from the driver's seat and adjusting the operator's seat, the working device should be lowered to the ground first, and the safety lock control lever should be lifted to lock and stop the engine. When the safety lock control lever is lowered (unlocked), accidentally touching any control lever can cause the machine to suddenly move and cause serious injury or death.
- When lifting or lowering the safety lock control lever, be careful not to touch the operating lever.
- Before leaving the driver's seat, lower the working device to the ground, raise the safety lock control lever to the locked position, and turn off the engine. At the same time, please be sure to remove the key, lock the door and cover, and carry the key with you and store it in a designated place.

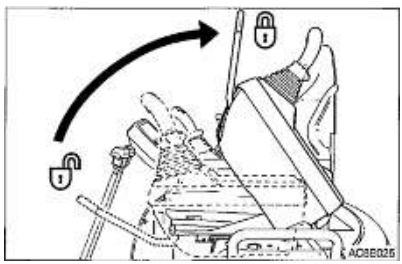

Throttle control lever

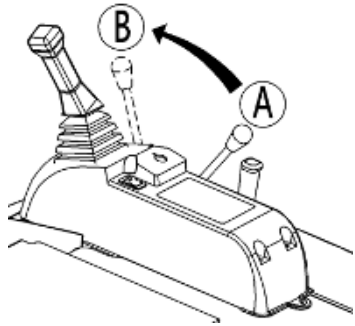

Used to control engine speed.

(A) ... low idle

(B) ... maximum speed

Joystick

Warning

- **Before starting operation, please double check and determine the joystick mode you are about to use.**
- **The machines described in this manual use ISO mode**

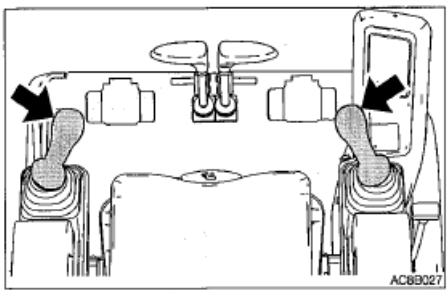

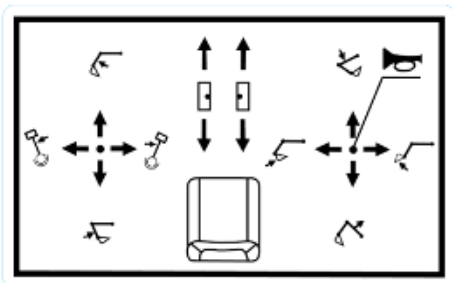

Bulldozer control lever

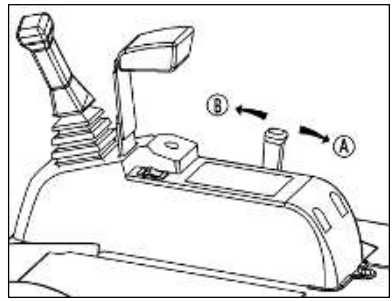

- Use this lever to operate the bulldozer blade.
- (A) ... lift the bulldozer blade
- (B) ... put down the bulldozer

Lower frame telescoping

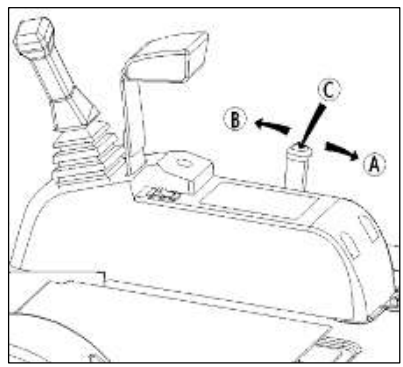

- Press the top button (C) of the operating lever and simultaneously operate this operating lever to control the extension and retraction of the lower frame.
- (A) ... lower shelf shrinkage
- (B) ... lower shelf extension

Walking joystick/pedal

Warning

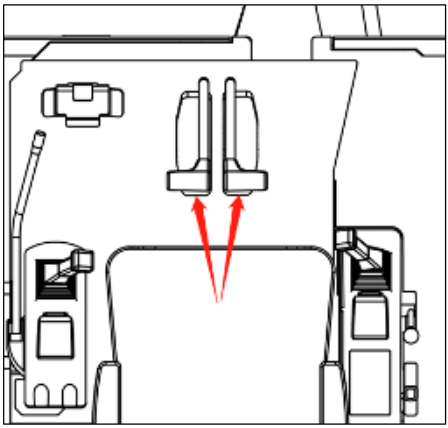

- Before operating the walking control lever/pedal, please keep the bulldozer blade in front of the driver's seat. Please remember that when the bulldozer is located behind the driver's seat, the direction of operation of the travel control lever/pedal must be opposite to when the bulldozer is located in front of the driver's seat.
- Do not place your feet on the pedal, except during walking operations. If you accidentally step on the pedal while working, the machine may suddenly move, leading to serious injuries and fatalities.
- Use these levers/pedals to move forward or backward and change direction. Fold up the pedal when not in use.

Boom swing pedal

Warning

- When not using the pedal, keep the pedal cover pressed against the pedal. If it is not pressed against the pedal, accidentally stepping on the pedal may lead to accidents.

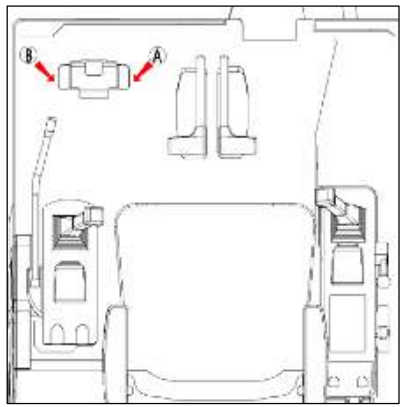

- Use this pedal to operate the boom swing.
- (A) ... the boom swings to the right
- (B) ... the boom swings to the left

parts

air-conditioning

Warning

- Please ensure sufficient ventilation is maintained at all times.
- Do not place flammable or explosive materials near the air outlet.

Air conditioning adjustment panel

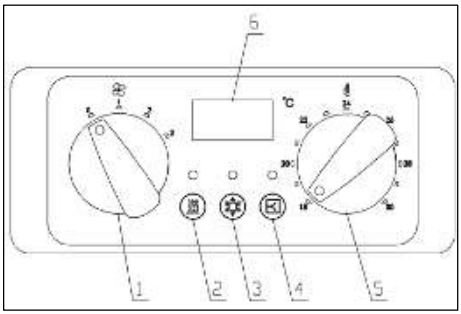

Function description:

- Wind speed adjustment knob
- Heating button
- Cold air button
- External circulation air button
- Temperature adjustment knob
- Temperature display screen

Outlet

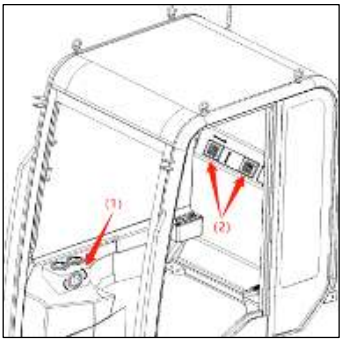

- Front air outlet
- Rear air outlet

operate

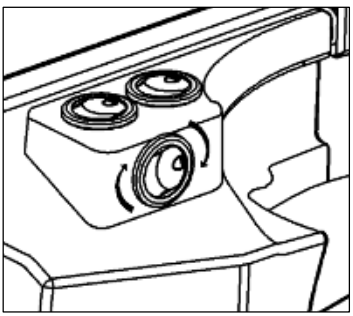

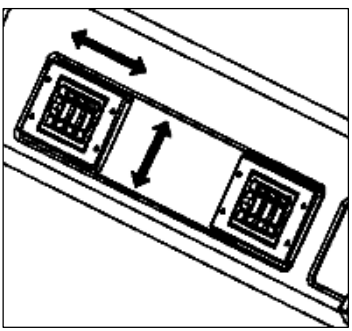

Move the damper up, down, left, right, or rotate to adjust the direction and size of the airflow.

Radio

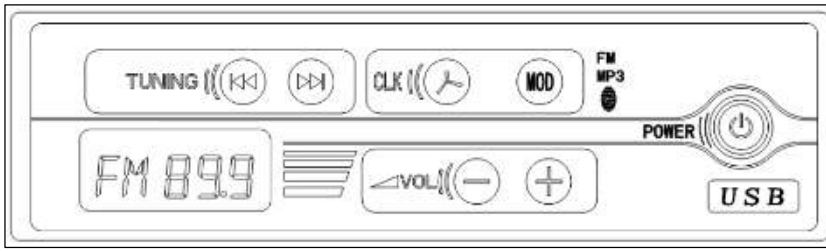

Operating instructions
1. on/off：Press the to turn on/off
2.Volume: Press the to increase the volume, press the to decrease the volume.
3.Mode switching: Press the MOD to switch modes, radio - MP3- Bluetooth
3.1 Radio mode
1）Manual channel search, long press or and then short press to fine tune the listening frequency.
2）Semi-automatic channel search：Short press or to automatically search for the next radio station to listen to.
3.2 MP3 mode
Select a song to play: Press to play the previous song, and press to play the next song.
3.3 Bluetooth mode
1) Bluetooth connection: Open the Bluetooth connection on the phone, and search for CAR BT when connecting to Bluetooth for the first time.
2) Bluetooth playback, select a song, press Previous, press Next to play.
4. Clock: Short press the key to display the clock. Press and hold the key for 2 seconds while displaying the clock, then adjust the hour by pressing the volume up or down, then press the key again, and then press the volume up or down for days, minutes, and finally press the key to end the adjustment.

Auxiliary hydraulic circuit

The first/second auxiliary hydraulic circuit (if equipped)

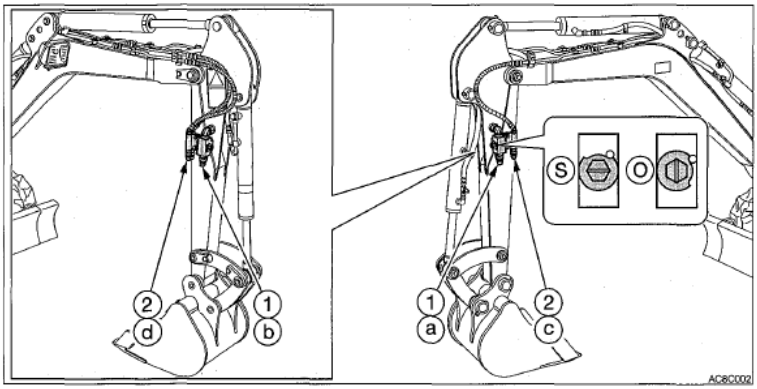

Third auxiliary hydraulic circuit (if equipped)

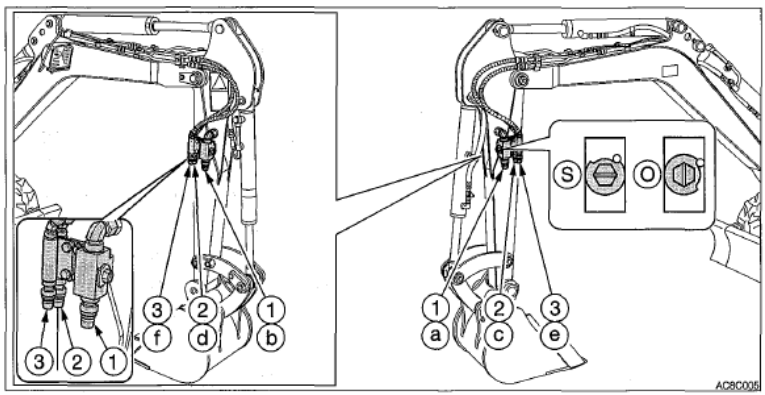

Warning

If the pipeline is disconnected before the hydraulic system is depressurized, hydraulic oil may be sprayed out.

- After the engine stops, please step on each auxiliary hydraulic pedal and the second auxiliary switch several times to release the pressure in the circuit.
- Loosen the pipe plug slowly to reduce the pressure inside the hydraulic oil tank.
- When disconnecting the hose, stand aside and slowly loosen it, slowly releasing its internal pressure before removing it.

These pipelines transport the hydraulic oil required to operate the breaker or other working devices.
(1)... the first auxiliary hydraulic line
(2)... The second auxiliary hydraulic line
(3)... The third auxiliary hydraulic line

Shut-off valve
(S): Close
(0): open

Connect the hydraulic oil circuit

To connect the accessory hydraulic lines, follow the procedure below:
1. Release the remaining pressure in the pipeline, and then close the stop valve. For details, please refer to "Release Residual Pressure" on page 2-21.
2. Remove the plug.
3. Connect the accessory hydraulic pipes to ports (a/c) and (b/d).
When installing the breaker, connect the oil inlet to port (a) and the oil return port to port (b).
4. Open the stop valve. When installing the hydraulic breaker, open the shut-off valve (1).
5. When the connection is completed, drain the air in the hydraulic pipe.
a. Start the engine and run it at low idling speed for 10 minutes without load.
b. When the engine is running at low idle speed, repeatedly operate the hydraulic auxiliary switch (about 10 times) to remove the air in the hydraulic pipe.
c. Stop the engine and wait at least 5 minutes until air bubbles escape from the hydraulic oil in the oil tank.
6. Check for oil leakage.

Disconnect the hydraulic circuit

1. Release the remaining pressure in the pipeline, and then close the stop valve. For details, please refer to "Relieve residual pressure" on page 2-21.
2. Disconnect the pipeline from ports (a/c) and (b/d).
3. Install the wire plug.
Important: If applicable, please follow the procedure described in the accessory manufacturer's manual when exhausting.

Relieve residual pressure

After using the auxiliary hydraulic circuit, there is residual pressure in the circuit. This is called residual pressure. Before disconnecting the pipeline, release the residual pressure.
When the engine stops, step on the pedal several times from side to side.

OPERATION

Before operation

Up and down the machine

Warning

● Do not jump on or off the machine. Do not try to get up or down the moving machine.
● When entering or exiting the cab, first fully open the door to the locked position, and check to make sure that the door can no longer move.
● When climbing up/down the pedals, hold on to the armrests to support your own weight and put your body in a three-point balance position (hands and feet).
● Never use the safety lock lever or lever as an armrest.

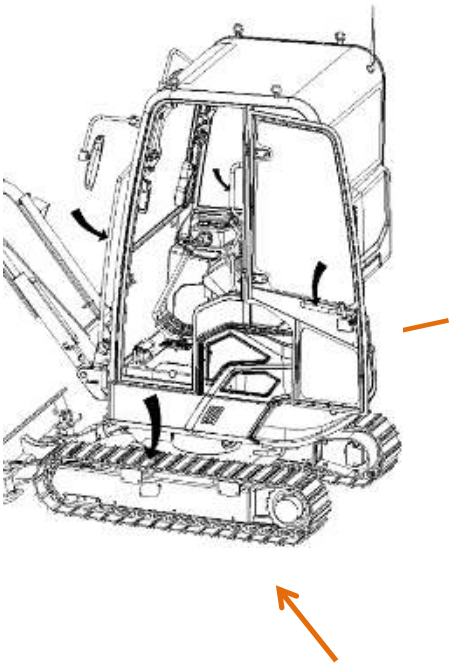

Detour check

Before starting the engine for the first time that day, perform a detour check once a day.

For details, please refer to "Maintenance, Detour check" on page 5-16.

Daily routine check

Before starting the engine for the first time that day, perform a detour check once a day.

For details, please refer to "Maintenance, Daily Routine check" on page 5-18.

Start and stop the engine

Before starting the engine

1. Adjust the seat to a comfortable operating position.
2. Fasten your seat belt.

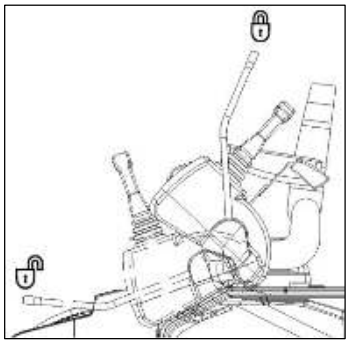

3. Check and confirm that the safety lock lever is in the locked position.

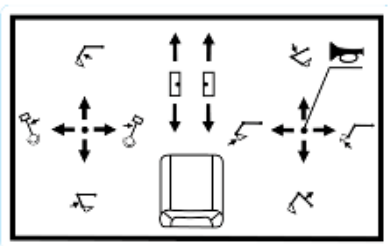

4. Check and confirm that all operating levers and pedals are in the neutral position.

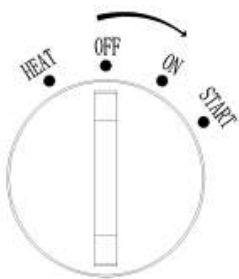

5. Insert the key into the start switch, turn it to the ON position, and then perform the following checks:

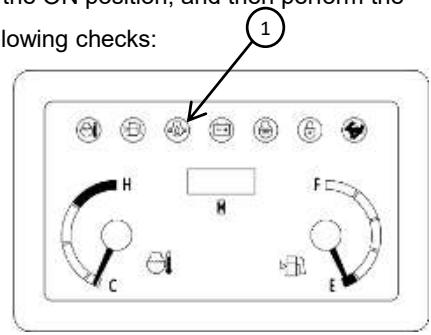

- All alarm lights are on for 1 second and an alarm sound is emitted for 2 seconds. The meter also started to work. After 2 seconds, the oil pressure warning light (1) is on, and all other lights are off.
- Check and confirm that the boom lights, headlights and instrument lights are all on.

If the light does not turn on or the alarm light does not sound, the bulb or wire may be damaged. Please contact Kenstone service agent for repair.

Start and stop the engine

Start the engine

Warning

- Clear all personnel from the work area.
- Sound the horn to warn people around the machine.

Important: Do not run the starter motor continuously for more than 15 seconds. If the engine fails to start, please wait 60 seconds, and then try to start the engine again.

Important: If the engine stalls due to fuel shortage, add fuel, turn the key to the ON position, wait for 60 seconds, and then start. If the starter motor is operated for a long time before enough fuel enters the pipeline, the starter motor will fail to start.

Normal start

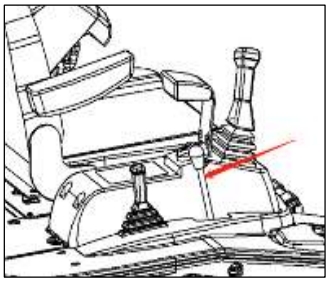

1. Pull the throttle lever to the middle position.
2. Turn the start key to the START position to start the engine.

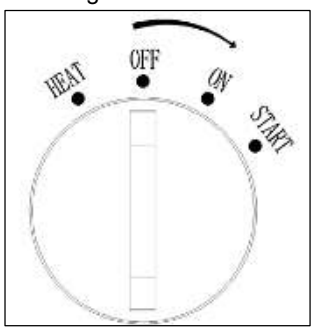

3. Release the key after the engine starts. The key automatically returns to the ON position.
4. Check and confirm that the warning light has gone out
5. Return to the throttle lever and warm up the engine. For details, please refer to "Engine Warming" on page 3-6.

Start in cold weather

Warning

Never use starter fluid on the engine, as it may cause an explosion.

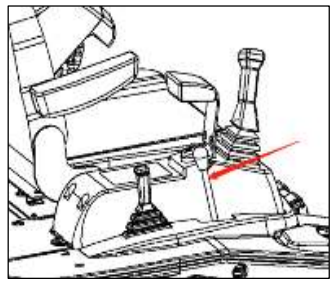

1. Pull the throttle lever to the middle position.

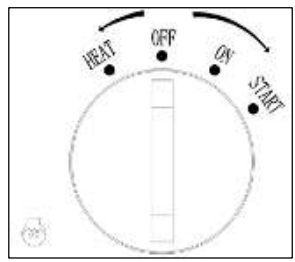

2. Rotate the start key counterclockwise to the preheating position for about 10 seconds, and the indicator light will light up during preheating.

Operate machine

Joystick mode (ISO mode)

Warning

- Before starting the operation, please double check and determine the mode you are about to use.
- The machines described in this manual use ISO mode

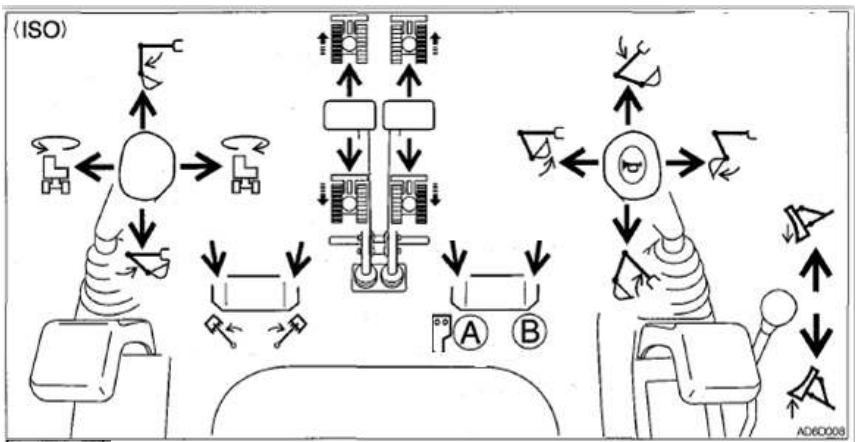

	Left track forward		Right track forward
	Left track backward		Right track backward
	Arm out		Boom down
	Arm out		Boom up
	Upper frame turn left		Bucket digging
	Upper frame turn right		Bucket unloading
	Boom swing to the left		Dozer down
	Boom swing to the right		Dozer up

Engine warm-up (hydraulic oil)

Warning

Operating the working device without warming up (hydraulic oil) is very dangerous, because the working device cannot respond quickly to the control or may move in unexpected ways, and the safety device may not operate normally. Therefore, be sure to warm up the machine adequately.

Important: Avoid running the engine at full speed before the end of the warm-up period. The engine warm-up time should not be too long (more than 20 minutes or more). When idling is required, load the engine from time to time or run the engine at a medium speed.

Normal warm-up

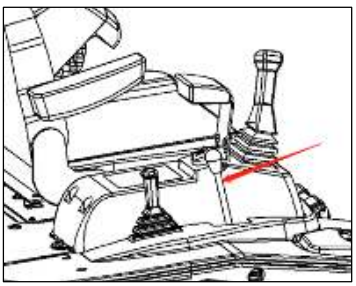

1. Return to the throttle lever, and then run the engine at low idle speed and no load for 5 minutes.

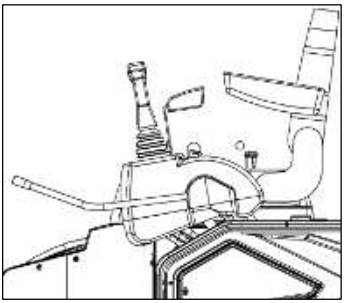

2. Fully lower the safety lock lever, release the lock and lift the bucket from the ground.

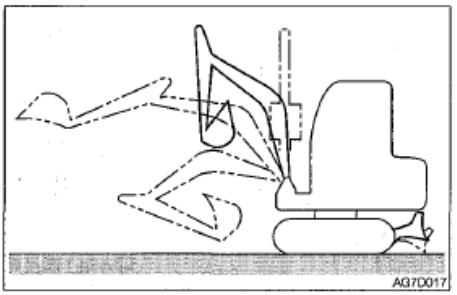

3. Slowly operate each cylinder several times under no-load conditions.

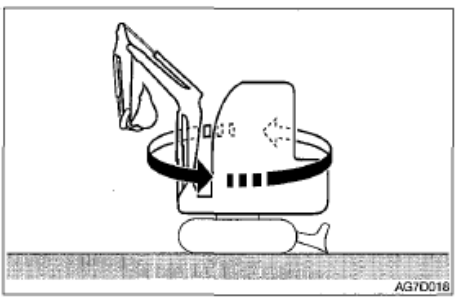

4. Slowly turn left and right several times.

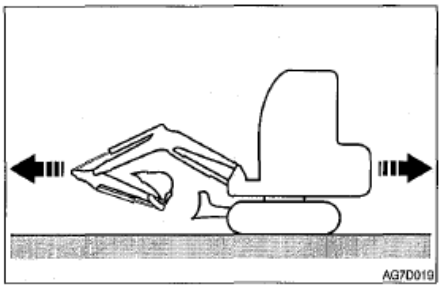

5.Walk slowly back and forth several times.

Warm up in cold weather

1. Perform the normal warm-up procedure.

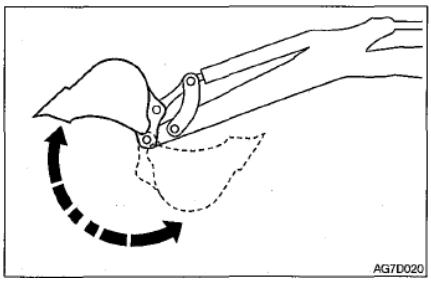

2. Straighten all working devices and keep them there.

But do not keep this state for more than 30 seconds.

3. Repeat step 2 until the bucket running speed is normal.

Check after warming up

After the engine and machine (hydraulic oil) are warmed up, please follow the steps below to check and repair if necessary.

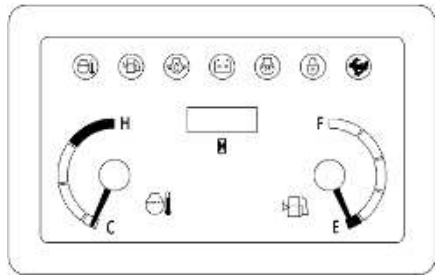

1. Check the warning lights and meters as follows:
Are all warning lights off?
Is the water temperature meter LED light in the green range?
2. Check whether the engine exhaust color, sound and vibration are normal.

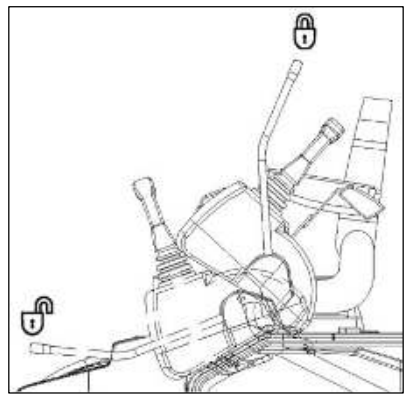

3. Raise the safety lock lever to the locked position, and then check whether the operation and walking levers are locked.

Operating walking joystick / pedal

Warning

- Never allow anyone to enter the turning radius and path of the machine.
- Indicate your intention to move by honking.
- There is a blind spot for viewing angle behind the machine. Before walking backwards, if necessary, you can turn the cab to check the safety of the rear and confirm that there is no one behind.

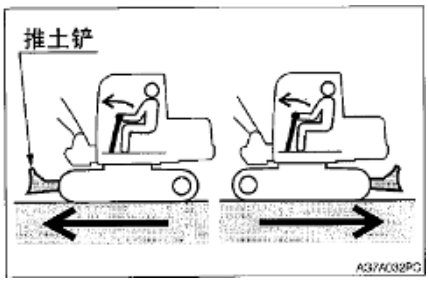

- Before operating the walking joystick/pedal, make sure that the bulldozer is in front of the cab. Please keep in mind that when the bulldozer is located behind the cab, the operating direction of the walking joystick/pedal must be opposite to when the bulldozer is located in front of the cab.
- Clear all obstacles in the path of the machine.

Move the machine back and forth

1. 1.Turn the throttle control knob to the right to increase engine power.

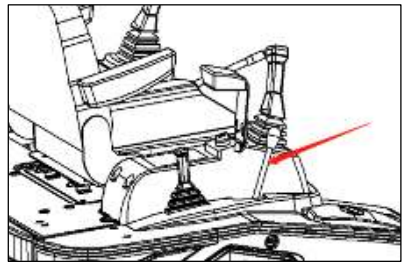

2.Fully lower the safety lock lever to unlock the hydraulic control system

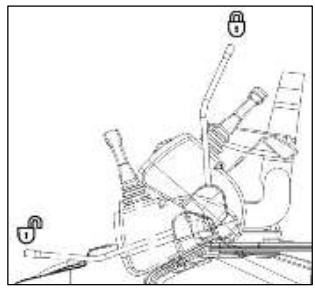

3.Put away the working device and lower it to the ground 30 to 40 cm.

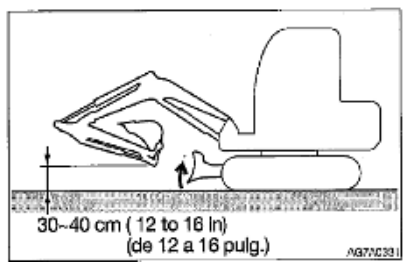

4. Raise the bulldozer.
5. Operate the walking joystick as follows.

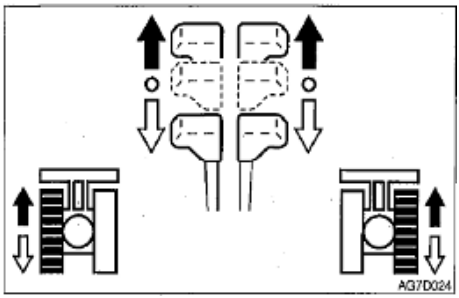

When the bulldozer is in front of the cab:

To go forward: Push the joystick forward.

To go backwards: Pull the joystick backwards.

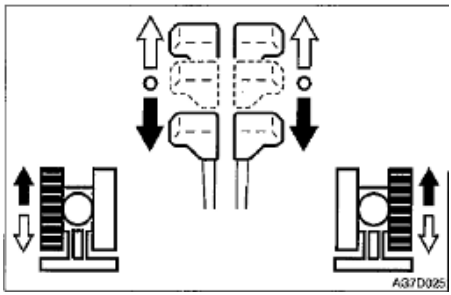

When the bulldozer is behind the cab:

To go forward: Pull the joystick backward.

To go backward: push the joystick forward.

Walking at high speed

Warning

When walking at high speed and applying a load greater than the set value, its speed will automatically slow down to a low speed. When the load is reduced, the speed will increase and return to high speed. It should be noted that the walking speed varies according to load conditions.

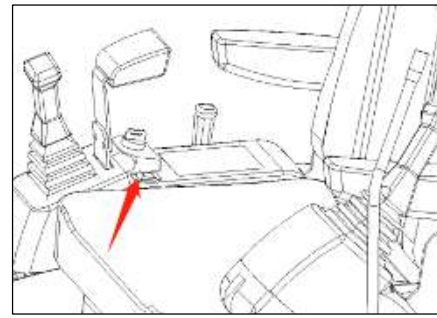

Press this button to switch between high and low speed.

Turn left and right

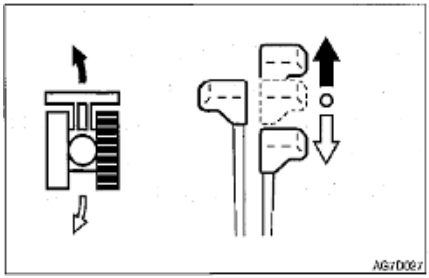

Turn left when stopping:

To make the front turn left: Move the right joystick forward.

To make the rear turn left: Move the right joystick backward.

To turn right, operate the right joystick in the same way as the left joystick.

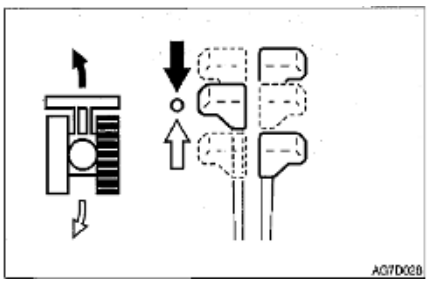

Turn left when walking:

When walking forward: Put the left joystick in the middle position.

When walking backward: put the left joystick in the middle position.

To turn right while walking, operate the right joystick in the same way as the left joystick.

Rotate in place

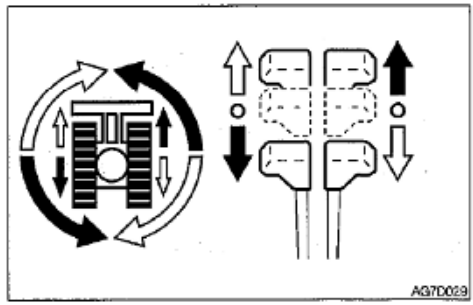

Turn left in place:

Pull the left joystick back and push the right joystick forward.

Turn right in place:

Pull the right joystick back and push the left joystick forward.

Stop walking

Warning

- Park the machine on a level, firm and safe ground. Set the parking device. If you must stop on a slope, you should block the track with a wedge to prevent the machine from moving.
- If the safety lock lever is not locked and accidentally touch any control handle, it will cause the machine to move suddenly and cause serious injury or death.
- Please note that even when the safety lock lever is set to the locked position, the bulldozer, boom swing and auxiliary hydraulic control cannot be locked.
- Do not accidentally touch these controls.

Warning

Unless there is an emergency, do not stop the machine in an emergency. Stop at the best time possible.

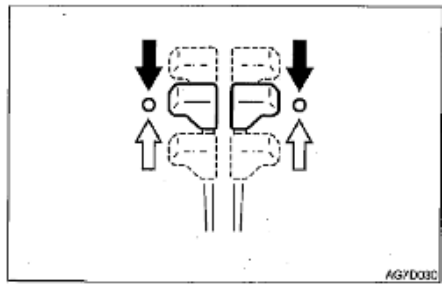

Slowly put the left and right walking joysticks in the middle position. The machine stops.

Operating working device

Warning

- Before starting the operation, please double check and determine which stick mode you are about to use.
- The machines described in this manual use ISO mode.

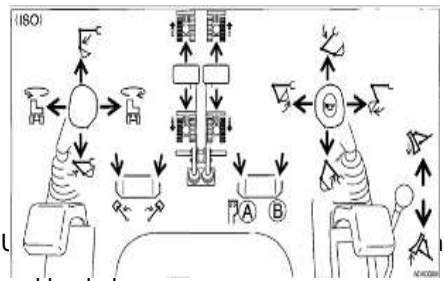

U
and bucket.

Use the left joystick to operate the stick and swing.

Return the joystick to the neutral position and stop the movement.

Rotating

Warning

Before rotating, check whether the surrounding area is safe.

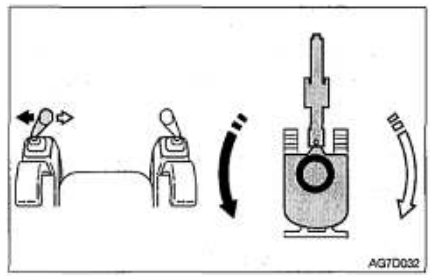

Turn the upper frame to the left: Move the left joystick to the left.

Turn the upper frame to the right: Move the left joystick to the right.

Operating the Boom

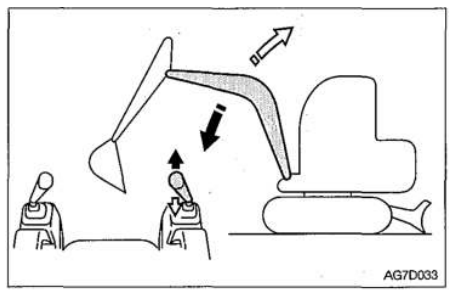

Lower the boom: Move the right joystick forward.

Boom up: Pull the right joystick backward.

Operating the arm

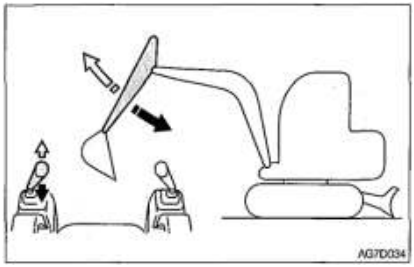

Arm in: Move the left joystick backward.

Arm out: Move the left lever forward.

Operating the bucket

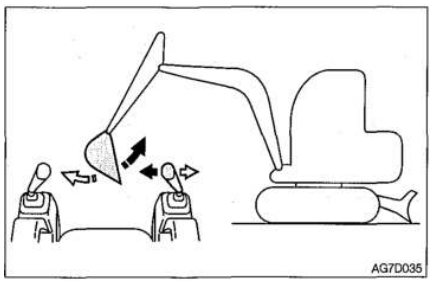

Bucket load: Move the right joystick to the left.

Bucket unloading: Pull the right joystick to the right.

Boom swing

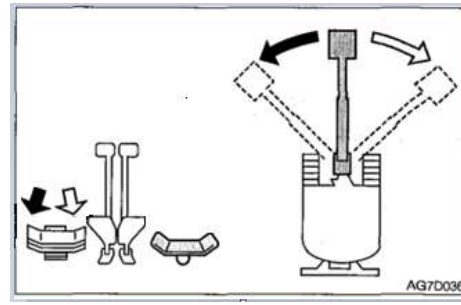

Boom swing to the left: step on the left side of the pedal.

Boom swings to the right: Step on the right side of the pedal.

Bulldozer

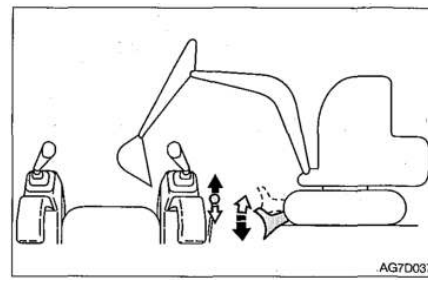

Dozer blade lowered: Move the joystick forward.

The bulldozer blade is raised: Move the joystick backward.

Operating procedures

Prohibited operation

Warning

- Do not operate on bedrock (hard or soft).
- Do not turn around when walking. If you must operate the bucket working device while walking, the speed should be slow enough so that you can fully control it at all times.

• Do not use rotational force for dismantling or leveling operations.

Do not use turning force to disassemble the wall or level the ground. Also, do not insert the bucket teeth into the ground during rotation. This will damage the bucket operating device.

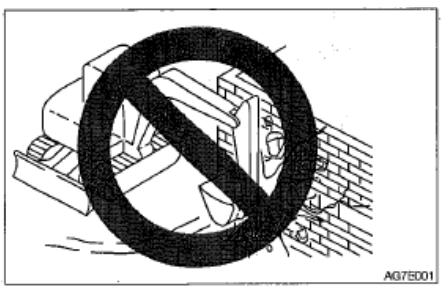

• When walking, do not dig

do not insert the bucket into the ground and use walking power to dig.

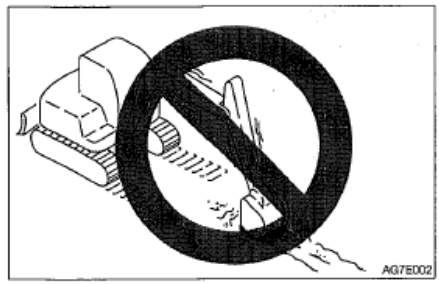

• Be stable when using hydraulic cylinders.

Do not extend the hydraulic cylinder to the end. Leave room for operation.

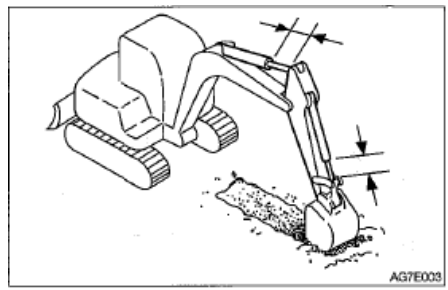

• When the machine is lowered and the arm cylinder is fully extended, do not use the bucket operating device to support the machine body. Doing so will concentrate the load on the arm cylinder and may damage the arm cylinder.

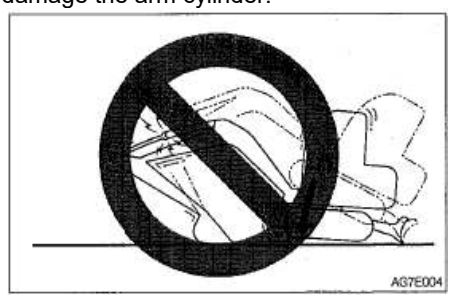

● **Do not use the bucket to push objects, or dig through the bucket with heavy blows**

Doing so will shorten the service life of the bucket operating device. Use hydraulic pressure for excavation.

● **Do not use the sinking force of the machine to operate.**

Applying additional tension to the machine will shorten its life. When digging, use the hydraulic pressure of the oil cylinder, the depth should be shallow, and the stroke should be large.

● **Excavate bedrock**

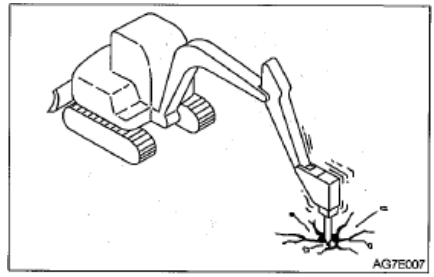

For hard bedrock, it is advisable to use a breaking hammer to break the rock into small pieces before digging. In this way, damage to the machine can be prevented, which is more economical.

● **Pay attention to the impact on the bulldozer**

Hitting rocks with the dozer blade will damage the blade and the dozer cylinder.

● **Carefully put away the bucket working device**

When the bucket working device is retracted, be careful not to make the bucket hit the dozer blade.

● **Do not use the bulldozer as a support**

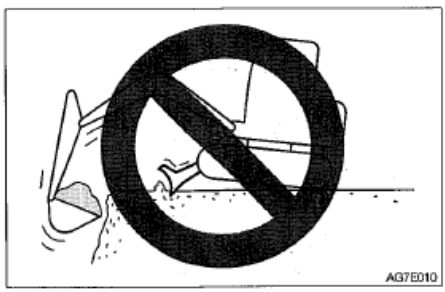

● **Pay attention to the bulldozer when digging**

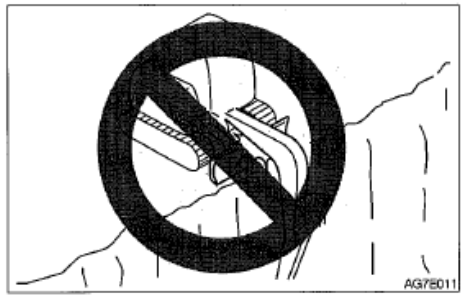

When deep excavation, if the bulldozer is in front, be careful not to make the boom and bucket hit the bulldozer.
When operating, try to keep the bulldozer behind.

● **Carefully use the bulldozer to dig down**

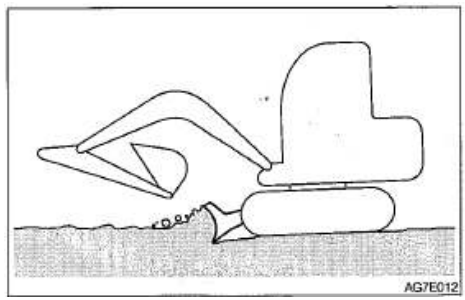

The dozer blade is designed for simple dozing operations. Do not use the bulldozer to dig deep down. This may damage the bulldozer and lower frame.

Precautions in operation

Precaution when walking

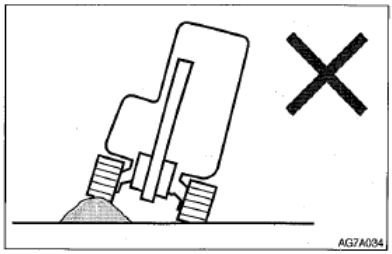

When walking on obstacles (rocks, tree stumps, etc.), a large load may be applied to the body, and it may be damaged. Try to avoid crossing obstacles. If you must do this, you should move the bucket operating device close to the ground and walk at a low speed so that the center of the crawler tracks over the obstacles.

Precautions when traveling at 2nd gear (high speed)

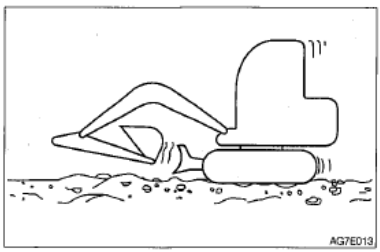

On uneven roads, keep walking at low speed to avoid sudden starts, stops, and changes in direction.
When traveling at 2nd gear (high speed) and applying a load greater than the set value, its speed will automatically slow down to 1st gear (low speed). When the load is reduced, the speed will increase and return to second gear (high speed). It should be noted that the walking speed varies according to the load situation (machines with automatic walking shift deceleration system).

- When traveling at second speed, the bulldozer should be in front

Precautions when using this machine in water

If the rear of the machine is immersed in water as shown in the picture above, it will cause the radiator fan to rotate in the water, resulting in damage to the fan. The rear of the machine must not be submerged in water.

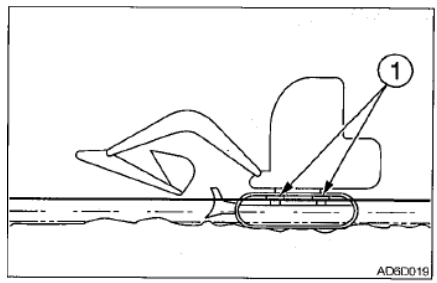

- Allowable water depth. The machine can be used in water only when the water does not exceed the middle of the track shoe (1).
- For those parts that have been used in water for a long time, enough grease should be added until the old grease is squeezed out.
- Never immerse the slewing support or the main body in water or sand. If it is submerged, please contact Kenstone service agent for inspection.

Precautions for walking on slopes

- Do not walk on steep slopes where the machine cannot maintain its stability. Please note that in actual use, the performance of the machine on slopes will decline due to its harsh operating conditions.
- When walking on a slope, place the bucket 20 to 30 cm above the ground. When climbing a steep slope, extend the bucket working device to the front. In an emergency, lower the bucket to the ground and turn off the machine.
- When walking on a slope, drive slowly at a low speed.
- When climbing, keep the driver facing the hillside. When going downhill, keep the driver facing downhill. In both cases, you must pay attention to the ground in front of the machine when walking.
- Do not reverse downhill

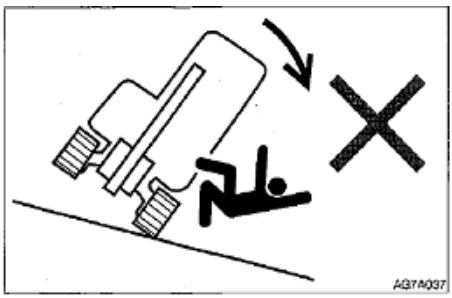

- Do not change direction on slopes or cross slopes. First return to flat ground, and then take another path.
- When walking on a gentle slope covered with grass or dead leaves, or on wet metal plates or frozen surfaces, the machine may slip. Do not stop the machine laterally on a slope.

Posture of walking on the slope

Climb a slope

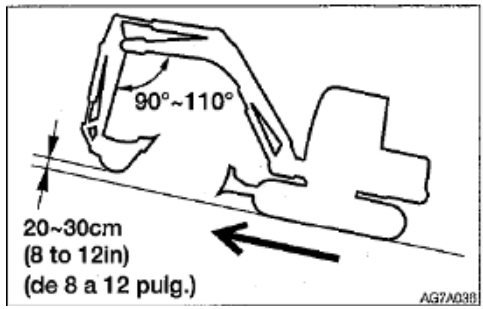

When climbing 15° or steeper slopes, maintain the machine attitude as shown in the figure above.

Downhill

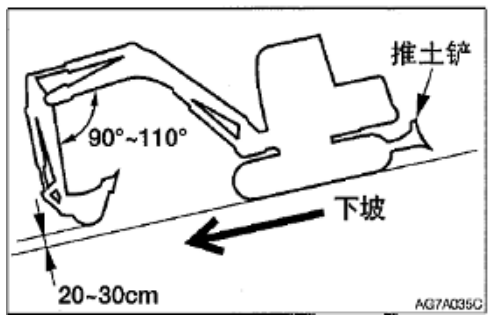

When descending 15° or steeper slopes, lower the engine speed and maintain the machine attitude as shown in the figure above.

Braking when going downhill

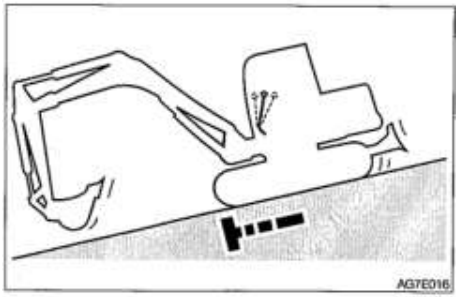

When going down a slope, after the walking joystick returns to the neutral position, the brake will automatically brake.

If the track slips

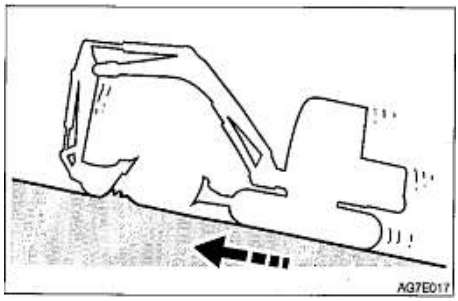

If the track slips and cannot walk when climbing a slope, use the digging force of the stick to climb the slope.

If the engine stalls

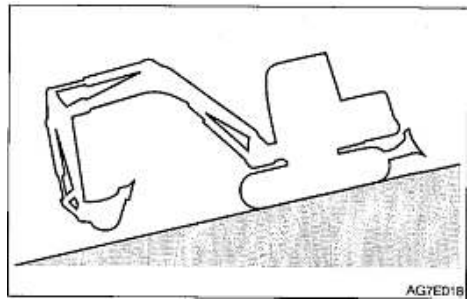

If the engine stalls when going down a slope, place the walking joystick in the neutral position, turn off the machine, and then start the engine.

Do not open the door when walking on a slope

When walking on a slope, opening the door is dangerous because the force required to open and close the door changes suddenly. When walking on a slope, be sure to close the door.

Out of the mud

If the machine is stuck in the mud, please follow the steps below to drive it out.

● If one track gets stuck in the mud

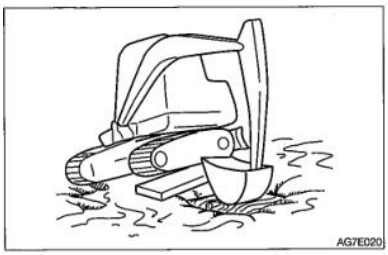

1. Swing the bucket to the side of the crawler in the mud.
2. Set the angle of the stick and boom to 90 to 110°.
3. Press the bottom of the bucket (not the teeth) on the ground.
4. Place a wooden board or similar object under the raised track.
5. Lift the bucket and slowly drive the machine out of the mud.

● If both tracks are in the mud

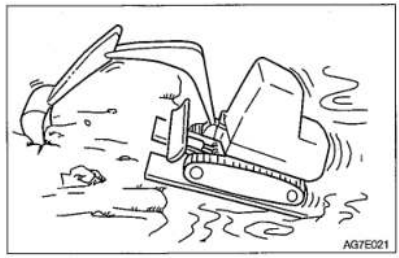

1. Perform steps 1 to 4 above for the two crawlers.
2. At the front of the machine, insert the bucket into the ground.
3. Pull the stick when walking forward to slowly move the machine out.

Operations that can be performed on this machine

● Digging

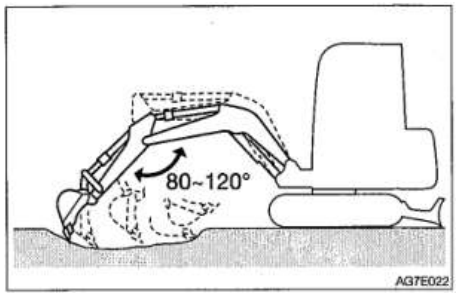

1. Place the bulldozer on the opposite side of the excavation area.
2. Use sticks and buckets to dig. When digging, the digging depth should be shallow and the stroke should be long. The maximum digging force is when the angle between the boom and the stick is 80 to 120°. This angle should be used for effective excavation.

● Dig a ditch

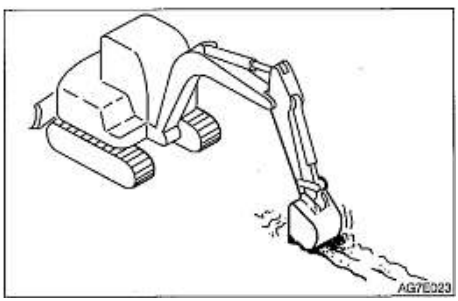

Install a bucket suitable for digging ditches and adjust the track to a position parallel to the ditches to be dug to improve work efficiency.

When digging a wide trench, first dig the side and then the middle.

● Excavation of side drainage ditch

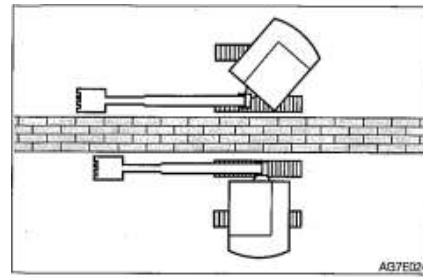

As shown in the picture, use the boom swing function to excavate the side trench.

● Loading

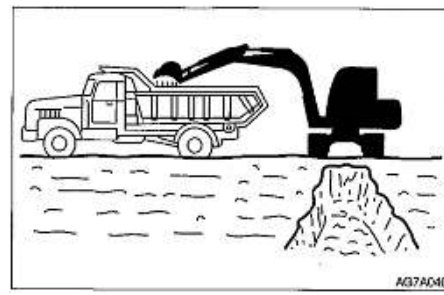

When loading soil into the truck compartment, load it from the back of the truck because it is easier and can load more soil than from the front. At the same time, a small angle of rotation is used to improve efficiency.

● Leveling

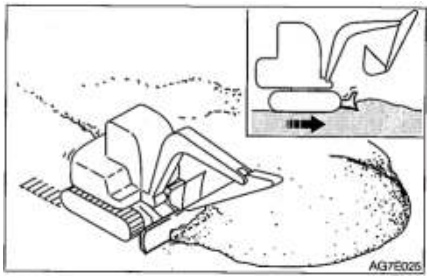

1. Place the bucket operating device close to the machine body.
2. Slowly push the soil away from the side of the mound.
3. When the mound is low, push the soil from the top. If the load is too heavy for the body, raise or lower the bulldozer to adjust.

Park the machine

Parking

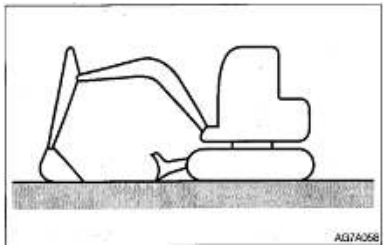

- Park the machine on a level, firm and safe ground. Set the parking device.

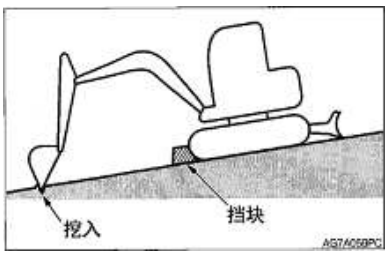

- If you must park or tilt the machine on a slope, park the machine firmly and prevent it from moving.
- When the machine is on the street, use grilles, warning signs, lights, etc. to make the machine easy to see even at night and avoid collisions with other vehicles.
- Before leaving the seat, raise the safety lock lever to the locked position and turn off the engine. At the same time, please be sure to pull out the key, lock the door and cover, and carry the key with you, and then store it in the designated place.

1. Put the walking joysticks in the middle position.
2. Push the throttle lever backward to make the engine run at idle speed.
3. Lower the bucket and bulldozer to the ground.
4. Raise the safety lock lever to the locked position.
5. Turn off the engine and remove the key.
   For details, please refer to "Stopping the Engine" on page 3-2.

Check after turning off the engine

1. Check for oil or water leakage, check the working device, cover and lower frame. If you find any abnormalities, please repair it.
2. Fill up with fuel.
   For details, please refer to "Checking the Fuel Level" on page 5-19.
3. Remove paper or dust in the engine room.
4. Remove the dirt from the lower frame.

Locked

Be sure to lock the following parts

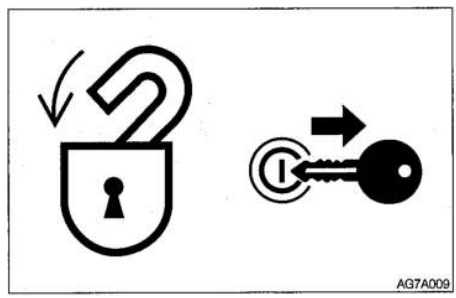

- Fuel tank cap
- Engine cover
- Cover

Processing in cold weather

Preparations for cold weather

It is not easy to start the engine in cold weather, and it becomes more difficult if the coolant freezes. Make the following preparations for cold weather issues.

Change fuel and lubricant

Replace hydraulic oil, engine oil, and fuel for models that are suitable for cold weather.

For details, please refer to "Fuel and Lubricant Table" on page 5-4.

Engine coolant

Warning

Engine coolant is flammable. Keep away from flames.

Use long-life coolant (antifreeze).

For details, please refer to "Fuel and Lubricant Table" on page 5-4.

Battery

When the temperature decreases, the battery performance decreases.

Check the battery. If the battery is discharged, please contact the Kenshi service agent to charge it.

For details, please refer to "Checking the Battery Level and Replenishing" on page 5-31.

Precautions after operation

Please observe the following precautions to prevent mud, water or icing of the lower frame from causing failure of the machine.

- Remove all mud and water from the body. In particular, clean the hydraulic cylinder rod to prevent damage to the oil seal due to mud or dust on the rod surface and water droplets entering the seal.
- Drain the water in the fuel tank to prevent it from freezing. For details, please refer to "Fuel Tank Drainage" on page 5-30.
- As the capacity of the battery drops significantly in a low temperature environment, cover the battery or remove it from the machine and store it in a warm place.

If the electrolyte level is low, add distilled water before starting work in the morning. In order to prevent the battery electrolyte from freezing at night, do not add water after get off work during the day.

After cold weather

When the weather gets warmer, do the following

- Change the fuel and lubricating oil of each component according to the model specified in the "Fuel and Lubricant Table". For details, please refer to "Fuel and Lubricant Table" on page 5-4.
- If using the "single season type" coolant, completely drain the cooling system, thoroughly clean the inside of the cooling system, and then fill with tap water. For details, please refer to "Cleaning the Engine Cooling System" on page 5-37.

Handling rubber tracks

Rubber tracks have an inherent weakness, lack of strength. Please be sure to observe the following prohibitions and precautions to prevent the rubber track from being damaged or falling off.

Do not walk or operate the machine in the following places:

- Walking and turning on gravel, rough and hard rocks, steel beams, scrap iron, or near the edge of the steel plate will damage the rubber track.

- Walking on a river bed or a place with a lot of pebbles may cause stones to get stuck in the track and damage the track, or cause the track to fall off.

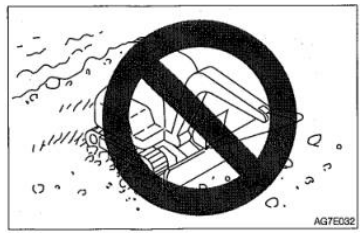

- Do not use the machine at the seaside. Salt may cause corrosion of the steel core.

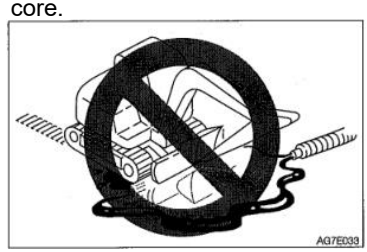

- Do not allow fuel, lubricating oil, salt or chemical solvents to adhere to the track. These substances may corrode the welds of the track steel core and cause rust or fall off. If any of these substances get on the track, it should be washed immediately with water.

- If the machine walks on an irregular surface, such as a newly paved asphalt road, exposed to a bonfire or walking on a hot iron plate under the scorching sun, it will cause unconventional wear or damage to the track.
- Do not move the ground where the rubber track may slip. Otherwise, it may accelerate track wear.

Precautions

When operating this machine, please observe the following precautions:

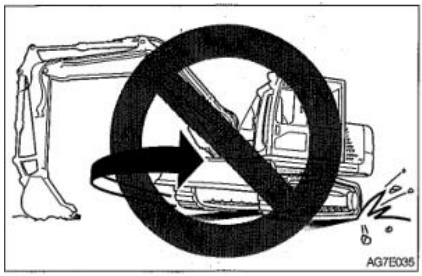

- Do not use the bucket operating device to rotate the lower frame when the front of the fuselage is raised (the upper vehicle does not rotate). Otherwise, the load will be concentrated on a single point of the crawler, causing rapid damage to the crawler.
- At any time, please try to avoid abruptly changing the course or turning in place on the concrete surface. This will damage the rubber track.
- Avoid falling and causing strong impact on the rubber track.
- Salt, potassium chloride, ammonium sulfate, potassium sulfate and lime superphosphate can damage the track. If any of these materials get on the track, it should be washed thoroughly with water immediately.
- Do not let both sides of the rubber track rub against concrete or walls.
- Do not let the bucket hit the rubber track, causing damage to the track.
- Be especially careful on snowy or frozen surfaces in winter, because the track is easy to slip.
- Please use the rubber track at a temperature between -25°C and 55°C.
- When storing rubber tracks for a long time (three months or longer). Please store it indoors where it is not exposed to direct sunlight or rain.

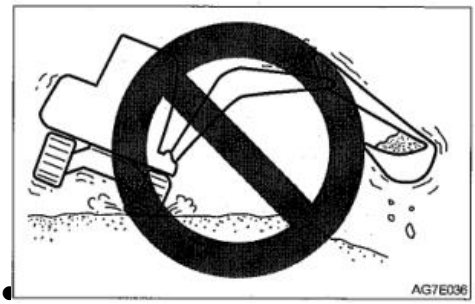

- rubber, the rubber track is not as stable as the steel track. Be especially careful when turning and swinging sideways.

Prevent rubber track from falling off

Observe the following precautions to prevent the track from falling off:

steps such as pebbles or larger rocks (20 centimeters or deeper), it should climb the steps at a right angle and do not change the route on the steps.

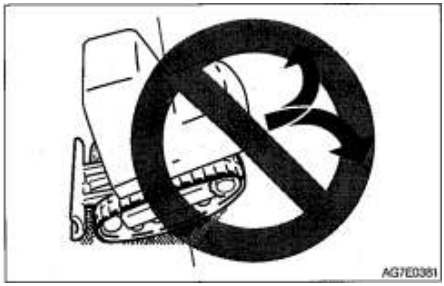

- Do not change direction at the beginning of the slope when reversing and climbing.

- Please avoid walking when one crawler is on a slope or protruding part and the other crawler is on a flat surface (this time the machine is inclined at an angle of 10° or more). Please place both crawlers on a flat surface for walking.

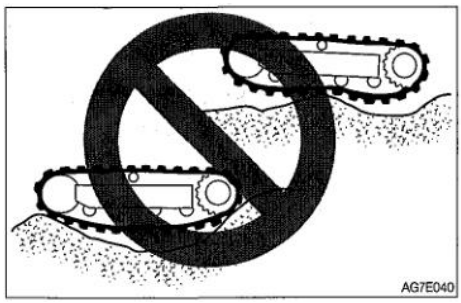

- Do not change direction when the track is loose as shown in the figure.

- In this case, if the machine moves backwards, the rubber tracks will come off.

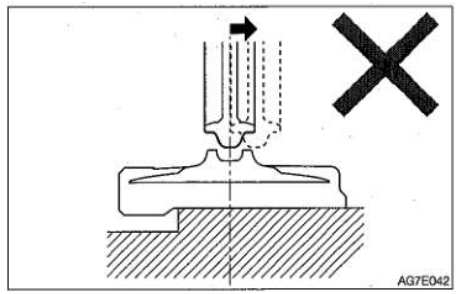

- In this case, if the machine rotates, the rubber tracks will come off.

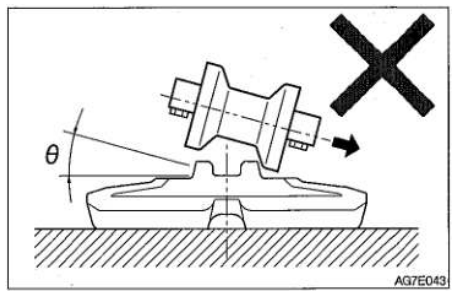

Turn on the warm air

1. Open the back cover

2. Find the warm air duct switch and turn it on by 90°

The warm air duct switch is located in the engine compartment and is colored red.

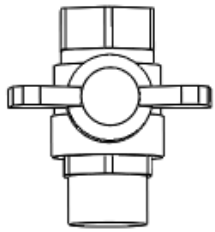

As shown in the figure above, the state is closed

Note: When the heater is not in use, turn off the heater water pipe switch.

3. At the right front of the cab, find the heater fan switch and turn it on.

The heater fan switch is located at the front right of the cab.

Lift the cab

1. Loosen the two bolts at the rear of the cab and take them out.

2. Locate the lift pump pull rod on the right side of the excavator,

3.Open the cover, and pull out the pull rod.

4. Insert a crowbar into the lifting pump hole on the right front, and continuously lift the crowbar up.

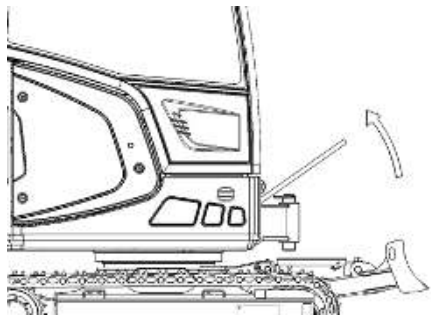

5. After the cab is raised, put down the safety support and withstand the oil cylinder.

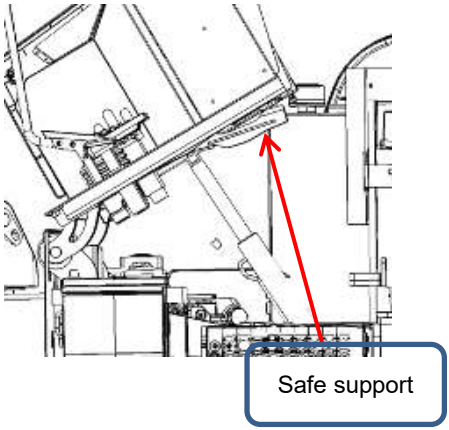

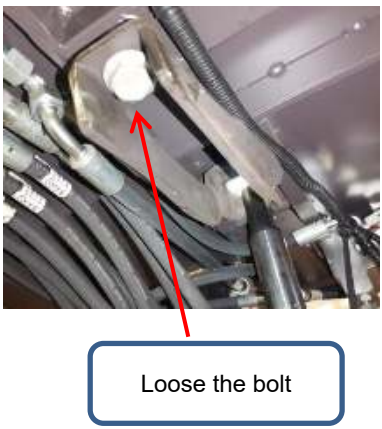

6. Use a safety support to hold the oil cylinder to prevent the cab platform from falling.

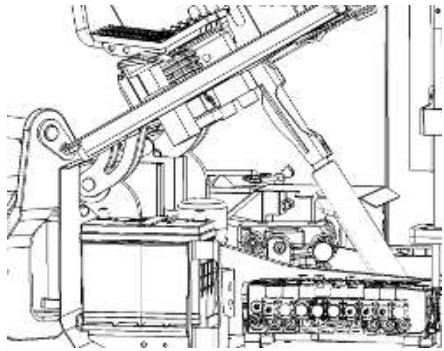

Warning

The above operations need to be performed under the guidance or supervision of professionals. Do not perform the above operations without permission. Otherwise, serious injury such as serious injury or death will result.

Note: After the cab is raised, be sure to use a safety rope to lift or fix the cab.

Cab reset

1. Fix the safety support in the original position with bolts.

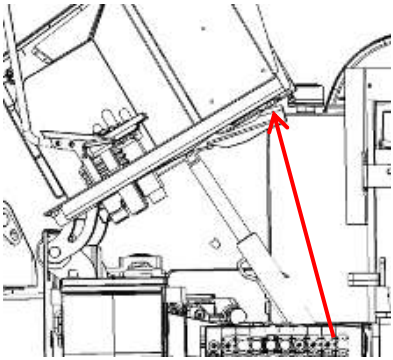

2. Remove the safety rope or other fall prevention devices.

3. Push the pull rod of the lift pump back to the initial position.

4. Use a crowbar to lift up continuously. Until the cab is reset.

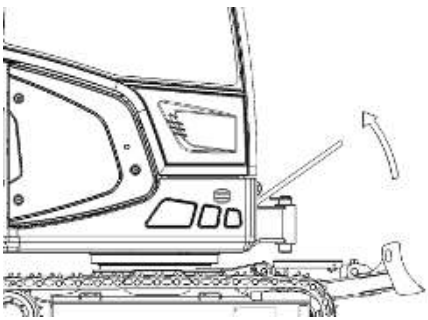

5. Insert the bolts into the rear fixing holes to fix the cab.

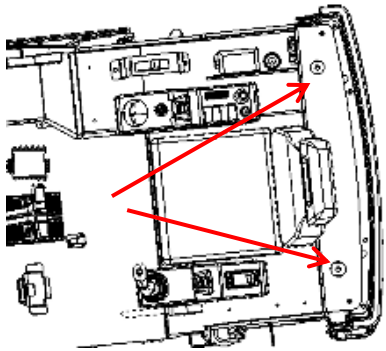

TRANSPORTATION

Load and u

Warning

During loading or unloading, the machine may overturn or fall. Please take the following safety measures:

- Choose a solid and level ground and keep a sufficient distance from the road shoulder.
- Fix a climbing ladder with sufficient strength and size to the rear of the transport vehicle, and the slope of the slope shall not exceed 15° . If the slope bends down too much, please use pillars or pads for support.
- Do not use working devices to load or unload the machine. Doing so may cause the machine to overturn or fall.
- Keep the transport truck clean and free of oil, sand, ice, snow and other foreign objects to prevent the machine from slipping; clean the track before loading and unloading.
- Block the wheels of the transporter with stop blocks to prevent movement.
- When loading and unloading the machine, please follow the signal of the signalman and walk slowly at a low speed.
- It is not allowed to change the route on the slope.
- Do not turn/sway on an inclined surface to avoid overturning the machine.
- When turning/swinging on a transport vehicle, the footing may not be stable enough, so you should drive slowly.
- If possible, lock the cab door after loading. Otherwise, it may open during transportation.
- Use wedges to plug the track firmly, and then use cables or chains to fasten the machine to the transport vehicle.

When loading or unloading the machine, be sure to use an inclined plane or platform, and follow the following precautions carefully.

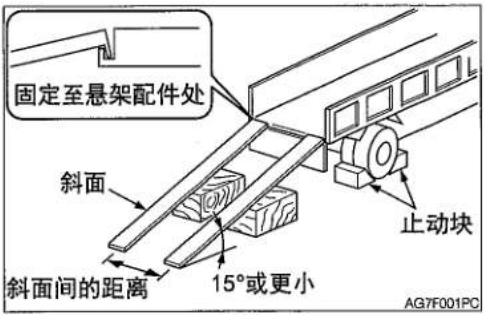

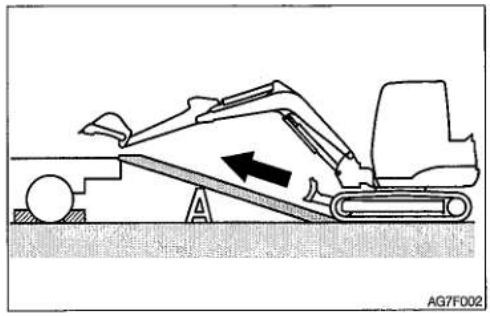

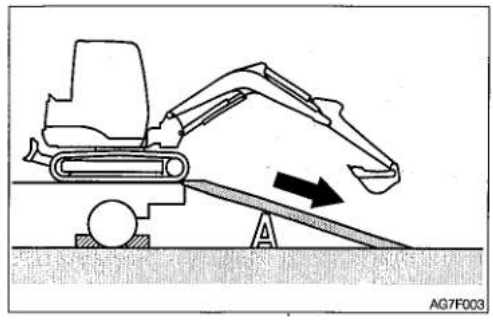

1. Put the parking device on the transporter and plug the wheels with the stop block.
2. Install the ladder firmly to the rear of the truck. The gradient of the ladder must not exceed 15°.
3. Align the center of the transporter with the center of the machine, and align the center of the ladder with the center of the track.
4. Make sure that the bulldozer will not hit the ladder.
5. Keep the bucket as low as possible and take care not to touch the transporter.
6. Reduce engine speed.
7. Follow the signal from the signalman and drive the machine at low speed to walk up or down the ladder.
8. Load the machine to the designated location of the transport truck.

For details, refer to "Transport Posture" on page 4-6.

Hoist machine

Warning

- Master and use the correct hoisting signal.
- Check the lifting equipment every day to see if any parts are damaged or missing, and replace if necessary.
- When hoisting, please use a cable that can bear the weight of the machine.
- Hoist the machine according to the procedure described below. Do not use any other methods to hoist the machine to avoid unbalance of the machine and cause an accident.

machine, do not lift it.

- When hoisting, please proceed slowly to prevent the machine from overturning.
- When hoisting, all personnel should stay away from the work area, and do not move the machine above people's heads.

Important: This hoisting method is suitable for models with standard machine parameters. The center of gravity varies depending on the installed accessories and optional equipment. For more details, please contact your Ken stone service agent.

Lifting

1. Rotate the upper frame so that the bulldozer is behind the machine (the upper frame must be parallel to the crawler frame).
2. Raise the bulldozer to the highest point.
3. Fully extend the bucket cylinder and stick cylinder, and raise the boom to its highest position.
4. If the boom swings to the left or right, return it to the neutral position.
5. Raise the safety lock lever to the locked position.
6. Turn off the engine, remove the start key and leave the machine.
7. Install the cable as shown in the figure below. Install the cable and hoisting accessories, taking care not to touch the body.
8. Slowly hoist the machine until it leaves the ground.
9. Stop hoisting until the machine becomes stable, and then hoist the machine again.

Important: The hoisting holes on the roof of the cab can only be used for hoisting the cab, and it is prohibited to use for hoisting the whole vehicle to avoid accidents!

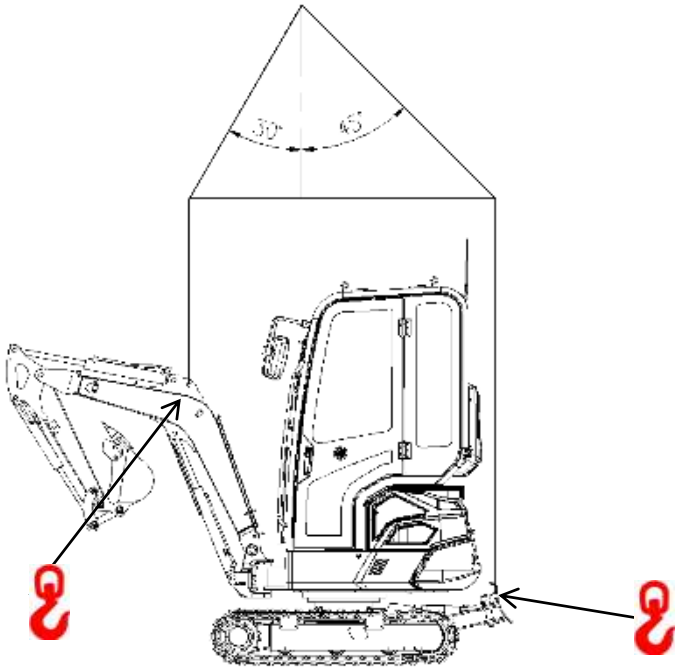

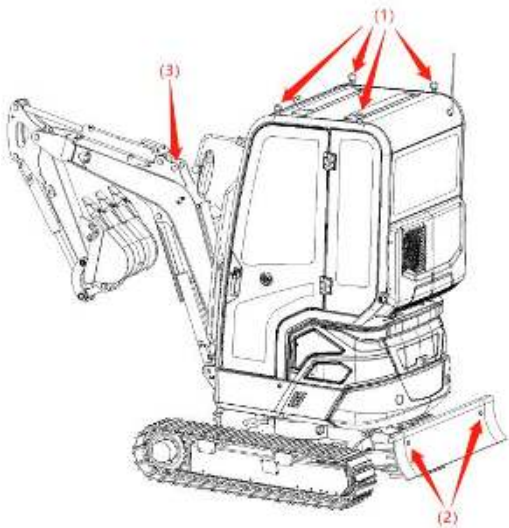

Illustrate：

1. The lifting ring (1) on the top of the cab can only be used for lifting the cab and cannot lift the entire vehicle.
2. When lifting the entire vehicle, please hook the lifting hook at the lifting holes (2) and (3).

Fix the machine

After loading the machine to the designated location, place and fix the machine according to the following requirements.

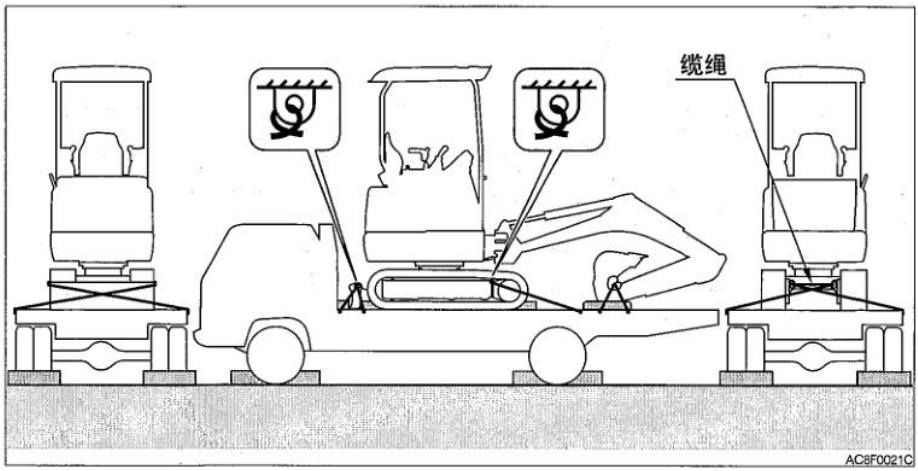

1. Lower the dozer blade.
2. Fully extend the bucket cylinder and stick cylinder, and then lower the boom.
3. Raise the safety lock lever to the locked position.
4. Turn off the engine, remove the starter key and lock all locks.
5. Place stop blocks before and after the track.
6. Tie a chain or cable to the lower frame of the machine and fasten it firmly to prevent the machine from sliding sideways.
7. Secure the bucket with a chain or cable.

Important: A piece of wood can be placed under the bucket to prevent the ground from being damaged by the bucket.

Safety measures should be taken during transportation：

Warning

• When transporting the machine, you should understand and follow the applicable safety regulations, vehicle codes, and traffic rules.

• After loading the machine, the length, width, height and weight of the transport truck should be considered to select the best transport route.

• During transportation, do not start or stop suddenly or drive at high speed, otherwise the loaded machine will move or lose its balance.

MAINTENANCE

Overview

Maintenance overview

In order to keep the machine in good condition and long-term use, please perform inspection and maintenance work correctly, and safely follow the procedures recommended in this manual.

According to the total operating time of the machine, the inspection and maintenance items can be divided into several groups: every 10 hours (bypass inspection and daily routine inspection), every 50 hours, every 250 hours, etc. Please refer to the hour meter reading to determine when to schedule inspection and maintenance. Items for which inspection and maintenance determined are listed under "When needed".

When using the machine in an extremely harsh environment (dust or high temperature), the inspection and maintenance should be performed earlier than the time specified in the maintenance table.

Precaution when maintenance

Do not perform any other inspection and maintenance work not listed in this manual.

For items not listed in this manual, please ask your sales or service agent for help.

Keep the machine clean

• Please clean the machine before performing inspection and maintenance, and strive to keep the machine clean.

• Turn off the engine before cleaning the machine. Cover the electrical parts to prevent water from entering. Water in electrical components may cause short circuits or malfunctions. Do not clean the battery, electronic control components, sensors, connectors and operating room with water or steam.

Fuel, lubricating oil and grease

• Select the fuel, lubricating oil and grease according to the "fuel and lubricating oil table".

• Use water-free fuel, lubricating oil and grease; when replacing or replenishing fuel, lubricating oil and grease, be careful not to allow dust to enter.

• Store fuel, lubricating oil and grease in designated locations and keep away from moisture or dust.

Precautions for refueling

• If the fuel filler port has a filter, do not remove the filter when refueling.

• After refueling, be sure to tighten the fuel tank cap.

• Do not fill more than the specified amount of fuel.

Do not use fuel to clean engine parts

Do not use fuel to clean engine parts. Use non-flammable cleaning agents.

Prevent dust from entering

When installing and removing parts, they should be done in a dust-free place; sweep the work area and clean the parts to prevent dust from entering.

Clean the installation surface

When installing and removing parts, make sure that the contact surfaces of th
th
th
da
co
se
re

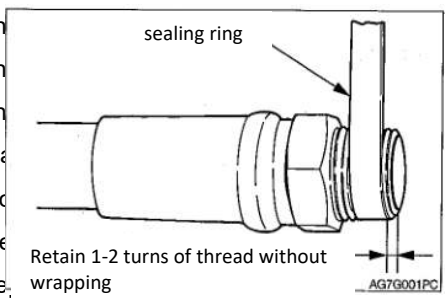

Seal ring and split pin

• Be sure to replace all the removed seal rings and split pins with new ones.

• When installing, be careful not to damage or twist the sealing ring.

• When wrapping the screw plug with seal tape, clean the old seal tape on the threads and clean the threads.

Waste disposal

• Make sure that the waste oil discharged from the machine is collected in a container. Improper disposal of waste oil can cause harm to the environment.

• When handling hazardous substances such as lubricating oil, fuel oil, cooling water, coolant filters and batteries, please follow applicable laws and regulations.

Inspection after maintenance

• Gradually increase the engine speed from idle speed to maximum speed, and check if there is any oil or water leaking from the repair parts.

• Operate the joysticks to check whether the machine is operating normally.

• Precautions when handling battery wiring

Before carrying out electronic system work or electric welding, the wiring should be disconnected from the battery poles (+ and -).

• Make sure to disconnect it from the ground electrode (-). When connecting, connect the ground electrode last.

• Do not disconnect the battery wiring when the engine is running normally. Otherwise, the circuit or other components of the rotary converter may be damaged.

Service data

List of fuels and lubricants

Please refer to the following table to select the appropriate fuel, lubricating oil and grease according to the temperature.

• Regardless of whether the specified time has elapsed, if the oil becomes too dirty or has deteriorated, replace it.

• When refueling, do not mix oils of different brands. If you need to change the brand, please change all fuel/lubricating oil.

Fuel oil

Fuel specification

Diesel should meet the following specifications. This table lists several diesel specifications currently in the world.

Diesel standard	Area	Diesel standard	Area
GB252	China	JIS K2204 2 level	Japan
ASTM D975 no.: 1-D, S15 no.: 2-D, S15	USA CANADA	ISO 8217DMX	INTERNATIONAL
Biodiesel Biodiesel blended as B5 ASTM D6751, D7467			
EN590: 2009	EURO	BS2869-A1 OR A2	UK
Biodiesel Biodiesel blended as B5 EN14214, EN590			

Diesel

To maintain the performance and service life of the engine, always use clean, high-quality fuel.

In order to prevent freezing in cold weather, please select diesel that can be used when the actual temperature is at least 12° C lower than the estimated minimum outdoor temperature.

Please use diesel with a cetane number of 45 or above. When used in high-cold or high-altitude areas, fuel with a higher cetane number is required.

Using fuel with a sulfur content of less than 0.5% by volume and using a fuel with high sulfur content may cause sulfuric acid corrosion in the engine cylinder.

Never mix kerosene, used engine lubricating oil or residual fuel oil with diesel. The use of kerosene is prohibited.

Poor quality fuel can reduce engine performance and/or cause engine damage.

It is not recommended to use fuel additives. Certain fuel additives can cause engine performance degradation.

Safety measures when using biodiesel

The engine manufacturer’ s warranty is invalid for machines that use biodiesel that does not meet the standards or has deteriorated

Lubricating oil

Part	Type	to be selected according to temperature	Replacement time
Oil Sump	diesel fuel API: CD level ACEA：E-3、E-4 or E-5	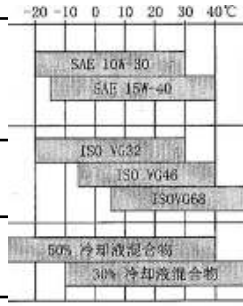	The first 50 hours of the new machine; after every 250 hours
Hydraulic oil tank	Anti-wear hydraulic oil		every 2000 hours ***
Cooling system	Cooling water (water + coolant)		every 1000 hours
Travel reduction gear	gear oil API：GL-4	SAE 90	The first 250 hours of the new machine; * after every 1000 hours
Swing motor gear	Lithium-based grease EP-2 NLGI 2#	-	every 50 hours
Swing support			every 50 hours
Working device			everyday or every 10 hours
pin			when needed

*: If the travel time accounts for a high proportion of the total operating time, the gear oil should be replaced before the specified time.

**: When using water, please use tap water (soft water), do not use well water or river water. When the outdoor temperature drops below 0° C, add coolant (antifreeze). Determine the mixing ratio according to the coolant manufacturer's instructions.

***: The hydraulic oil replacement interval depends on the type of hydraulic oil being used. The new machine will be delivered with Kenshi genuine hydraulic oil 46, and the hydraulic oil change interval described in this manual is based on the assumption that Kenshi genuine hydraulic oil 46 is used. When using ordinary anti-wear hydraulic oil, the hydraulic oil should be changed every 2000 hours.

API Standard: American Petroleum Organization

ACEA Standard: European Automobile Manufacturers Association

SAE Standard: American Society of Automotive Engineers

Volume

Oil sump	Cooling system	Hydraulic oil tank	Fuel tank	Walking reduction gear
3.4L	4.7L	25.3L	22L	0.8L X 2

Consumables list

Regularly replace consumables such as filters and filter elements according to the following table.

System	Item	name	replace time
Hydraulic	hydraulic return filter	filter	the first 50 hours after every 500 hours
Hydraulic	air breather or filter		every 1000 hours
Engine lubrication system	Engine oil filter	Filter cartridge	the first 50 hours after every 250 hours
Fuel system	water separation filter	filter	every 500 hours
	fuel filter	Filter cartridge	every 250 hours
Air system	air filter	outer filter	Every 1000 hours or after cleaning 6 times (whichever comes first)
		inner filter	When the outer filter is replaced

Regularly replace hydraulic oil

Hydraulic oil deteriorates faster when using a hydraulic hammer than during regular excavation operations. It is necessary to replace the hydraulic oil and return filter element.

Failure to replace in a timely manner can cause damage to the machine and hydraulic system of the crushing hammer. To extend the service life of the hydraulic device, please replace the hydraulic oil and return oil filter element in a timely manner according to the table below.

When replacing hydraulic oil, please clean the oil suction screen.

Replacement interval (hours)

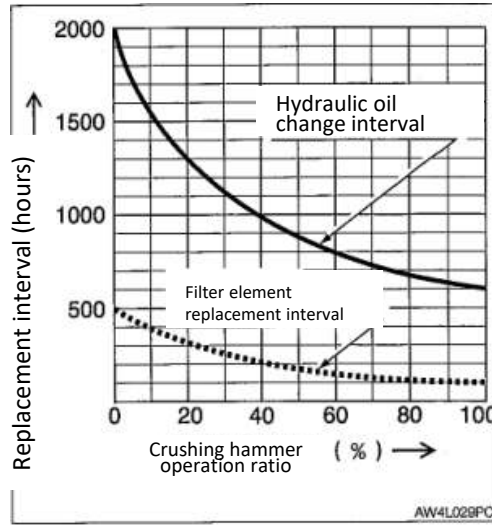

When using conventional wear-resistant hydraulic oil.

Project	Hydraulic oil	Filter element
First time	—	25
Second time	—	100
Periodical	1200 (600)	200

For example, the crushing hammer operation ratio is 100%. Please refer to "Hydraulic Crushing Hammer" on pages 8-5 for details.

Consumables list

Regularly replace consumables such as filters and filter elements according to the following table.

System	Item	name	replace time
Hydraulic	hydraulic return filter	filter	the first 50 hours after every 500 hours
Hydraulic	air breather or filter		every 1000 hours
Engine lubrication system	Engine oil filter	Filter cartridge	the first 50 hours after every 250 hours
Fuel system	water separation filter	filter	every 500 hours
	fuel filter	Filter cartridge	every 250 hours
Air system	air filter	outer filter	Every 1000 hours or after cleaning 6 times (whichever comes first)
		inner filter	When the outer filter is replaced

List of tools (if equipped)

Tools list			
no.	name	pc	remark
1	tool box	1	
2	Allen key 4mm	1	
3	Allen key5mm	1	
4	Allen key6mm	1	
5	Allen key8mm	1	
6	Allen key10mm	1	
7	Allen key12mm	1	
8	Double end open spanner22*24	1	
9	Double end open spanner27*30	1	
10	Double end open spanner30*32	1	
11	Double end open spanner36*41	1	
12	Combination wrench8mm	1	
13	Combination wrench 10mm	1	
14	Combination wrench 12mm	1	
15	Combination wrench 13mm	1	
16	Combination wrench 14mm	1	
17	Combination wrench 15mm	1	
18	Combination wrench 16mm	1	
19	Combination wrench 17mm	1	
20	Combination wrench 18mm	1	
21	Combination wrench 19mm	1	
22	Socket head 10mm	1	
23	Socket head 11mm	1	
24	Socket head 12mm	1	
25	Socket head 13mm	1	
26	Socket head 14mm	1	
27	Socket head 15mm	1	
28	Socket head 16mm	1	
29	Socket head 17mm	1	
30	Socket head 18mm	1	
31	Socket head 19mm	1	extra long
32	Socket head 21mm	1	
33	Socket head 22mm	1	
34	Socket head 24mm	1	
35	Socket head 27mm	1	
36	Socket head 30mm	1	to 30mm
37	Bending rod 12.5mm	1	
38	Short rod 12.5mm	2	One for each length
39	Wire cutters 200mm	1	
40	Needle nose pliers 200mm	1	
41	Ratchet wrench 12.5mm	1	
42	Adjustable wrench 300mm	1	
43	Round head hammer 1.5pon	1	
44	Slotted screwdriver 200mm*8mm	1	
45	Phillips screwdriver 200mm*8mm	1	
46	Grease gun 400g	1	
47	Pulley wrench 60-140mm	1	

Tightening torque list

Nuts and bolts (ISO10.9 strength)

Unless otherwise specified in the text, tighten the nuts and bolts with the torque shown in the following table.

The tightening torque for installing the plastic cover is not listed in the table below. For more details, please consult your sales or service agent. Over tightening will damage it.

When replacing nuts and bolts, use the same size and standard nuts and bolts for replacement.

When tightening nuts and bolts, each nut and bolt should be tightened alternately (top, bottom, left to right) or twisted 2 to 3 times to ensure that they are evenly tightened.

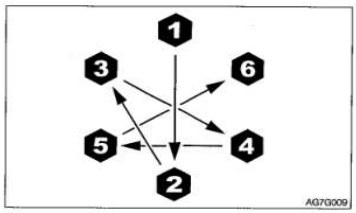

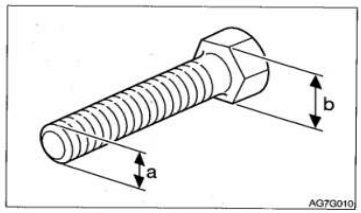

Item	Dimension(b)	Dimension(a) and pitch	Tightening torque Normal connection	
	mm	mm	N・m	ft-lb.
coarse thread	10	M6 x 1.0	9,8±0,5	7,2±0,4
	12, 13	M8 x 1.25	22,6±1,1	16,6±0,8
	14, 17	M10 x 1.5	47,1±2,4	34,7±1,7
	17, 19	M12 x 1.75	83,4±4,1	61,5±3,0
	19, 22	M14 x 2.0	134,4±6,7	99,1±4,9
	22, 24	M16 x 2.0	207,9±10,4	153,3±7,7
	27, 30	M20 x 2.5	410,9±20,5	303,1±15,1
Fine thread	12, 13	M8 x 1.0	24,5±1,2	18,1±0,9
	14, 17	M10 x 1.25	50±2,5	36,9±1,8
	17, 19	M12 x 1.5	87,3±4,3	64,4±3,2
	19, 22	M14 x 1.5	135,3±6,8	99,8±5,0
	22, 24	M16 x 1.5	220,6±11	162,7±8,1
	27, 30	M20 x 1.5	452,1±22,6	333,4±16,6

Safety critical components

To use the machine safely, perform regular inspections and maintenance. The following safety-critical components need to be replaced regularly to improve safety. Damage to these parts can cause serious injury or fire.

Safety Critical Parts List

Item		Safety-critical parts that are regularly replaced	Replace time
Fuel system		Fuel pipe	every 2 years
		Packing on the fuel tank cap	
Heater		heater hose	
Hydraulic system	engine	hydraulic pipe (pump outlet)	
		Hydraulic pipe (pump suction port)	
		Hydraulic tube (swing motor)	
		Hydraulic tube (walking motor)	
	Working device	hydraulic pipe (boom cylinder pipe)	
		Hydraulic pipe (arm cylinder pipe)	
		Hydraulic pipe (bucket cylinder pipe)	
		Hydraulic pipe (swing cylinder)	
		Hydraulic pipe (bulldozer cylinder)	
		Hydraulic pipe (span cylinder)	
		Hydraulic pipe (pilot valve)	
		Hydraulic pipe (auxiliary pipe)	
		Safety belt	every 3 years
		Anti-slip mat	

Safety critical parts

The materials of the safety-critical components listed above will change over time and cause wear or performance degradation. It is difficult to determine the degree of degradation during regular inspections, so after a period of time, even if these parts are running well, they still need to be replaced with new ones to ensure stable performance. Please note that regardless of the replacement plan, you must replace it immediately when symptoms of wear are found. If the pipe clamp is deformed or cracked, it should be replaced with the hose immediately. When replacing safety parts, please consult your sales or service agent.
Except for safety-critical parts, please check and tighten hydraulic pipes, or replace them if necessary. When replacing hydraulic pipes, both O-rings and sealing rings should be replaced at the same time.
Check the fuel and hydraulic pipes at the intervals specified in the table below.
See "Maintenance".

Inspection	item
Routine daily inspections	Leakage of hydraulic pipe or fuel pipe joint Damaged cab or roof-replacement*
Check monthly	Leakage of hydraulic pipe or fuel pipe joint Damage to hydraulic pipes or fuel pipes (cracking, fraying or tearing)
Annual inspection	Leakage of hydraulic pipe or fuel pipe joint Aging, twisting, damage (cracking, fraying, or tearing) of hydraulic pipes or fuel pipes, or hoses in contact with other parts of the machine.

<Applicable model RH22>

*Cab part number: 0301120080

RH30 cab

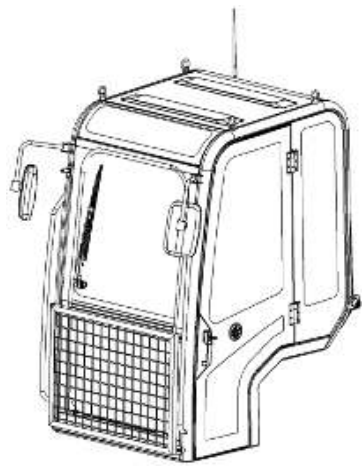

Maintenance list

Inspection and maintenance items	page
Detour check	
Open the engine cover and hood for inspection	5-17
Bypass the machine for inspection	5-17
Sit in the driver's seat for inspection	5-17
Daily routine inspection (every 10 hours)	
Check and replenish coolant	5-18
Check and replenish engine oil	5-18
Check the water separator	5-19
Check the fuel level	5-19
Check the oil level of the hydraulic oil tank and replenish it	5-20
Lubrication working device	5-21
After the first 20 hours (only for new machines)	
Check and adjust the fan belt	5-23
Replace the hydraulic oil return filter	5-24
Every 50 hours	
Check and adjust the tension of the track	5-26
Lubricated slewing ring	5-28
Lubricate the gears of the slewing motor	5-28
Fuel tank drain	5-29
Check battery level and replenish	5-30
Every 100 hours	
Cleaning the water separator	5-31
After the first 250 hours (only for new machines)	
Replace travel motor gear oil*	5-32
Every 250 hours	
Check and adjust the fan belt	5-33
Replace engine lubricating oil and oil filter	5-33
Clean the air filter	5-34
Check the throttle control system	5-35
Clean radiator fins and oil cooler fins	5-36
Replace fuel filter	5-36
Clean the air filter	5-39

*: If the travel time accounts for a high proportion of the total operating time, the gear oil should be replaced earlier than the specified time.

Maintenance list

Inspection and maintenance items	page
Every 500 hours	
Replace the hydraulic oil return filter	5-40
Replace the water separation filter	5-40
Every 1000 hours	
Replace travel motor gear oil*	5-42
Replace the air filter element	5-42
Replace the ventilator (if equipped)	5-43
Check and adjust the engine valve clearance	5-43
Clean the engine cooling system	5-44
Every 1500 hours	
Check and clean the engine injector	5-47
Check the crankcase ventilation system	5-47
Every 2000 hours	
Overlap engine valve seat	5-48
Replace the hydraulic oil and clean the suction filter	5-48
When needed	
Replace bucket teeth	5-50
Replace bucket	5-52
Lubricate rods and pedals	5-54
Check the rubber track	5-55
Replace rubber track	5-56
Check and replenish glass cleaning fluid	5-57

*: If the travel time accounts for a high proportion of the total operating time, the gear oil should be replaced earlier than the specified time.

Detour check

Please check the following before starting the engine for the first time every day.

Warning

- Before operation, perform a detour inspection; repair immediately if necessary.
- Before working inside the machine, be sure to fix the engine cover or hood. Please keep the engine cover and the cover closed when the machine is parked on a slope in strong windy weather.

Before starting the engine, patrol around the machine and remove any combustible materials around the engine. At the same time, check the machine for oil or water leakage, as well as loose or damaged nuts, bolts or wires.

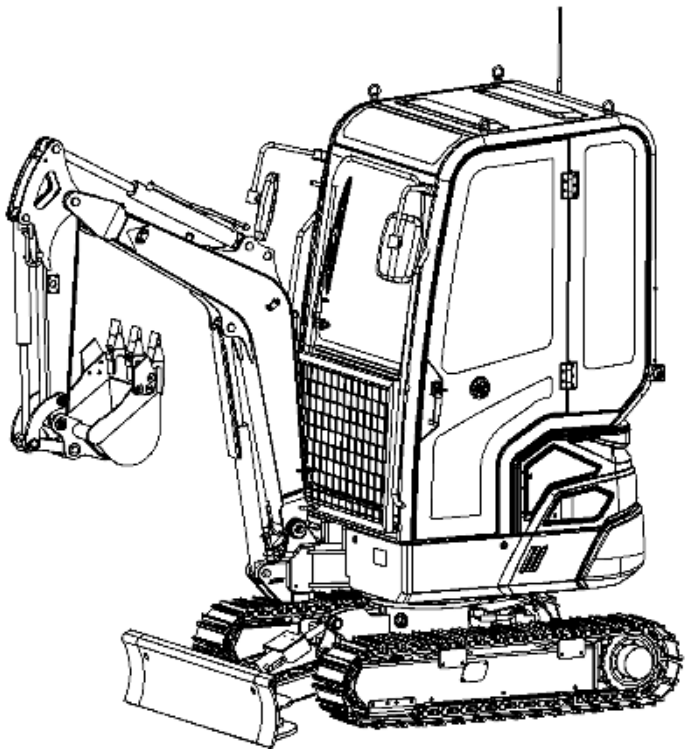

Open the engine cover and hood for inspection

1. Check for branches, leaves, oil or other combustibles around the engine and battery.

2. Check for lubricating oil or engine coolant leakage around the engine.

3. Check the hydraulic oil pipes, hydraulic devices, hoses or joints for oil leakage.

Bypass the machine for inspection

1. Check whether there is dust on the lamp, whether there is damage and the bulb is burned out.

2. Check the hydraulic accessories and hoses for damage.

3. Check the bucket, bucket teeth and side teeth for wear, damage and looseness.

4. Check for damage to the hook, anti-skid stop, and hook seat on the bucket. (Optional)

5. Check the armrests, pedals and non-slip surfaces for damage and loose bolts.

6. Check the track, track shoe slippage, track rollers, idler and sprocket for damage, wear, and loose bolts.

7. Check whether the traveling motor has oil leakage.

8. Check whether the ceiling and guard plate are damaged and the nuts and bolts are loose.

9. Check whether the mirror and the mirror in the car are dirty or damaged, and adjust if necessary.

10. Check the label for dust or damage.

Sit in the driver's seat for inspection

1. Check the seat and seat belt for dust or damage.

2. Check whether there is dust, oil or other combustibles on the driver's seat.

3. Check the monitor, electrical appliances and switches for dust or damage.

Daily routine inspection (every 10 hours)

Please check the following before starting the engine for the first time every day.

Warning

- Before operation, please carry out daily routine inspection; repair immediately if necessary.
- Before working inside the machine, be sure to fix the engine cover or hood. Please keep the engine cover and the cover closed when the machine is parked on a slope in strong windy weather.

Check and replenish coolant

Warning

- When the cooling water is hot, do not remove the radiator cap or waterproof plug. The engine should be turned off, and after the engine and radiator have cooled down, slowly loosen the radiator cap and waterproof plug and remove them.
- When the cooling water is hot, do not remove the radiator cap or waterproof plug. The engine should be turned off, and after the engine and radiator have cooled down, slowly loosen the radiator cap and waterproof plug and remove them.

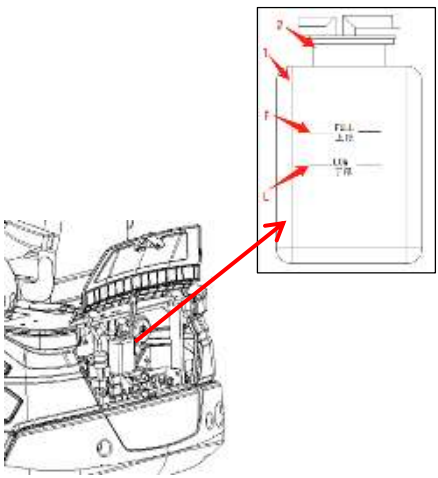

Check

1. Open the engine cover.
2. Check the cooling water level in the water tank (1). The water level should be between the upper limit (H) and the lower limit (L). If it is lower than the lower limit (L), it should be supplemented.

Add

1. Remove the cover (2) of the water tank (1).
2. Add cooling water to the upper line (H) of the water tank (1).

If the water tank (1) is found to be empty during the inspection, please check for water leakage, and then check the water level of the radiator (3). When necessary, add water to the radiator (3), and then add water to the water tank (1).

3. Put the cover (2) on.

Note: Only use clean water (soft water) to supplement the loss of cooling water caused by evaporation. Only use the coolant (antifreeze) and clean water (soft water) with the specified mixing ratio to supplement the loss of cooling water caused by leakage.

Check and replenish engine oil

Warning

Please turn off the engine and wait for the machine to cool down before performing maintenance.

Check

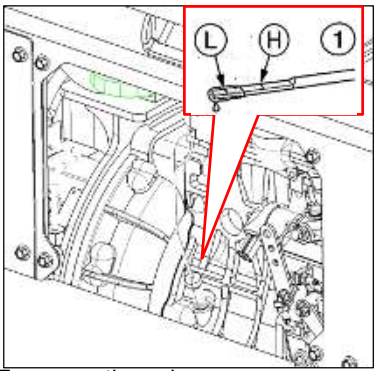

1. Turn over the cab.
2. Pull out the oil dipstick (1), and dry the lubricating oil with a rag.
3. Reinsert the oil dipstick (1) to the end, and then pull it out.
4. Check the lubricating oil on the oil dipstick (1). The oil level should be at the upper limit (H) and the lower limit (L). If it is lower than the lower limit (L), should be added.

Add

1. Remove the fuel filler cap (2).
2. Between the upper limit (H) and lower limit (L) of the oil dipstick (1) refuel, if the oil level is too high or too low, there will be problems.
3. Tighten the fuel filler cap (2).
4. Start the engine, run it at low idling speed for 5 minutes and turn it off.
5. After about 10 minutes, check the oil level.

Check the fuel level

- When handling fuel oil or working on the fuel system, do not smoke or present open flames.
- Do not remove the fuel tank cap or refuel when the engine is running normally or has not yet cooled down. Do not spill fuel on the hot surface of the machine.
- Fill the fuel tank in a well-ventilated area.
- Spilled fuel should be wiped clean immediately.
- Do not fill up the fuel tank. There should be room for oil expansion.
- Tighten the fuel tank cap securely.
- Use the correct fuel grade according to the season.

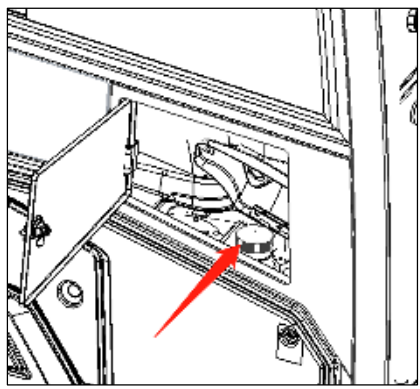

Check the oil-water separator

Warning

• When handling fuel oil or working on the fuel system, do not smoke or present open flames.

• The engine should be turned off in a well-ventilated place, and maintenance should be performed after the machine has cooled down.

• Spilled fuel should be wiped clean immediately.

Check

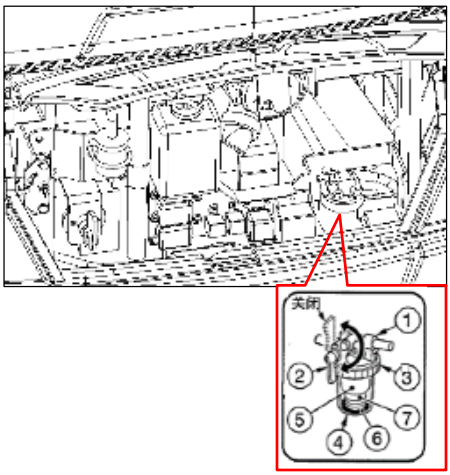

1. Turn up the cab or remove the right side cover.
2. Check the oil-water separator (1).
   If the red indicator ring (6) sinks to the bottom, there is no water mixed in.
   If the red indicator ring (6) floats, the water is full to the ring.
   Drain and clean.

Check the oil level of the hydraulic oil tank and replenish it

Before the hydraulic system is depressurized, if the cover or filter is removed or the pipe is disconnected, hydraulic oil may spray out.

• Slowly loosen the vent plug to relieve the pressure in the tank.

Check

The oil level will change with the oil temperature. Maintain the machine in the posture shown in the figure below and check the fuel condition.

• Machine attitude when checking hydraulic oil level

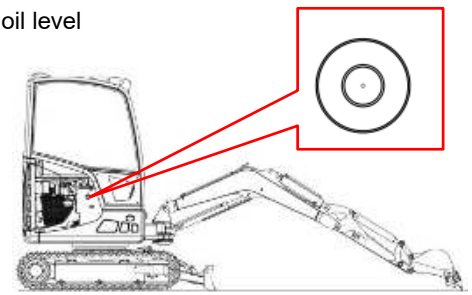

1. Start the engine and run at low speed.
2. Fully extend the width of the track.
3. Retract all the cylinders (stick and bucket) and lower the bucket to the ground.
4. Lower the bulldozer and turn off the engine.
5. Use the level gauge (1) to check the oil level.

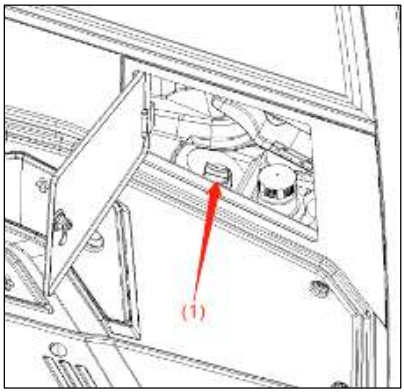

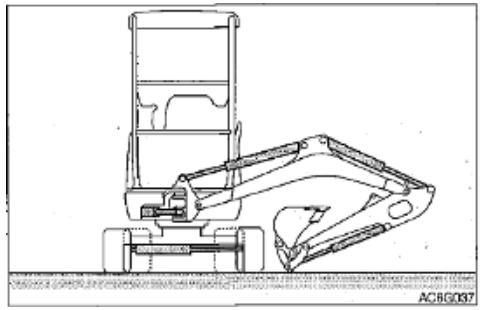

Supplement

Important: Do not add fuel above the upper limit (H). This can damage the hydraulic circuit or cause hydraulic oil injection. If accidentally done, turn off the engine, wait for the hydraulic oil to cool down, and then drain the excess oil from the drain port.

Important: Please do not forget to apply pressure to the hydraulic oil tank to avoid damage to the pump due to air suction. (If not equipped with a ventilator).

Open the cab side door cover and upper cover.

Slowly loosen the air plug (1) to relieve internal pressure, then remove it.

Add hydraulic oil to the middle of the level gauge.

Pressurize the hydraulic oil tank as shown in the following figure.

Attachment: For machines equipped with ventilators, pressurization is not required.

Pressurized hydraulic oil tank

Start the engine and run at low speed.

1. Remove the exhaust plug (1) and set the safety lock control lever to the relaxed position.
2. Fully extend the bucket, stick, boom, swing, and span cylinders.
3. Turn off the engine and raise the safety lock control lever to the locked position.
4. Tighten the exhaust plug (1) and then apply pressure by retracting the cylinder.

Lubricate working device

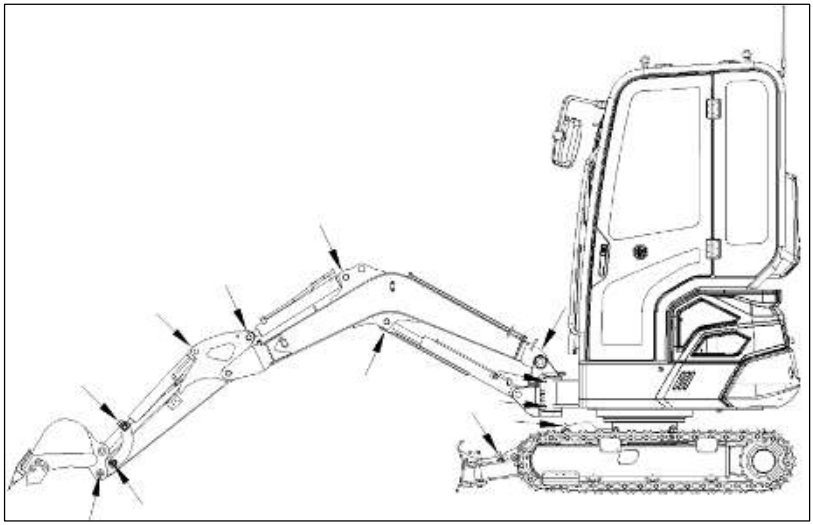

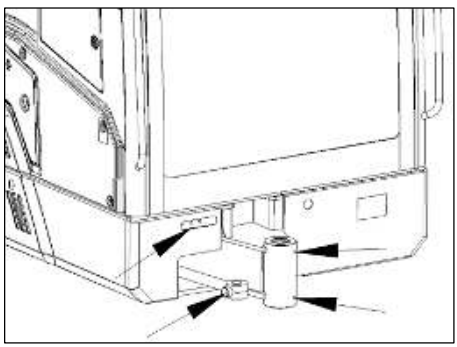

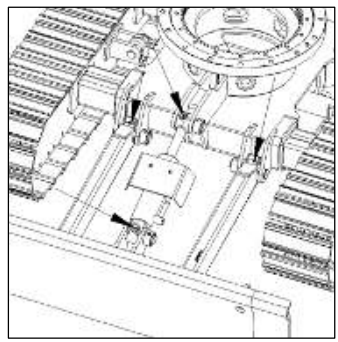

1. Keep the machine in the posture shown in the figure above, lower the working device to the ground, and then turn off the engine.
2. Use a grease gun to lubricate the grease fittings.
3. Wipe off excess grease.

After the first 50 hours

（only for new excavator）

- **Check and adjust the fan belt**

Warning

Please turn off the engine and wait for the machine to cool down before performing maintenance.

The engine, exhaust pipes, radiators, hydraulic pipes, sliding parts and many other parts of the machine are very hot when the engine is just turned off. Touching these parts can cause burns.

Important: Loose belts can cause poor battery charging, overheating of the engine, or premature belt wear. Too tight the belt will damage the water pump or bearing and the generator drive belt.

Important: Do not allow any grease to adhere to the belt.

Check

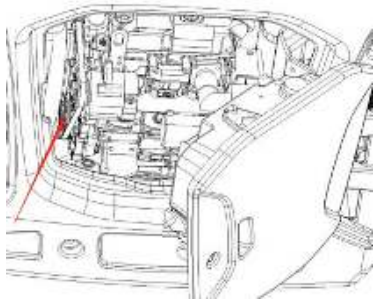

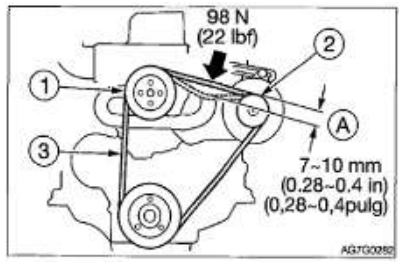

1. Open the back cover of the machine.
2. Press the center of the fan pulley (1) and generator pulley (2) to check the tension (about 98N).
3. Check the fan belt (3) and replace it if the following conditions exist:

There are cracks or cracks.

The belt has worn out and hit the bottom of the V-groove of the pulley.

The belt is pulled too loosely and can no longer be adjusted.

Adjustment

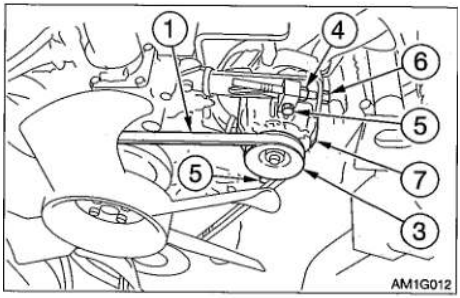

1. Loosen the bolt (5) and the lock nut (4).
2. Turn the adjusting bolt (6) to move the generator (7) and adjust the tension of the fan belt (1).

Tighten: turn clockwise

Loosen: turn counterclockwise

3. Tighten the bolt (5) and the lock nut (4).

Note: When replacing the new belt, first run the engine at low idle speed for about 3 to 5 minutes to run with the new belt, and then adjust the tension.

• Replace the hydraulic oil return filter

⚠ Warning he machine to cool down before performing maintenance.

The engine and hydraulic system and many other parts are very hot when the engine stalls. Touching these parts can cause burns.

Hydraulic oil is also under high temperature and high pressure. Be careful not to touch the hydraulic oil when loosening the cover or plug. Operating the machine in this situation will cause burns and injuries due to hot oil spraying.

• Before the hydraulic system is depressurized, if the cover or filter is removed or the pipeline is disconnected, hydraulic oil may spray out.

Slowly loosen the vent plug to relieve the pressure in the fuel tank.

When removing plugs or bolts or disconnecting hoses, stand on one side and loosen them slowly to gradually release the internal pressure before removing them.

1. Turn over the cab.
2. Slowly release the air plug ⑧ to reduce the internal pressure, and then lower the plug.
3. Loosen the hose band and remove the hose from the flange ③.
4. Loosen the bolts and take out the flange ③.
5. Remove the return oil filter ④.
6. Install a new return oil filter.
7. Reinstall the flange ③ and the hose.
8. Check the liquid level with the liquid level gauge ⑦, if the liquid level is too low, it should be replenished. For details, please refer to "Checking and Replenishing the Oil Level of the Hydraulic Oil Tank" on page 5-20.

Attachment: For machines equipped with a ventilator, do not pressurize.

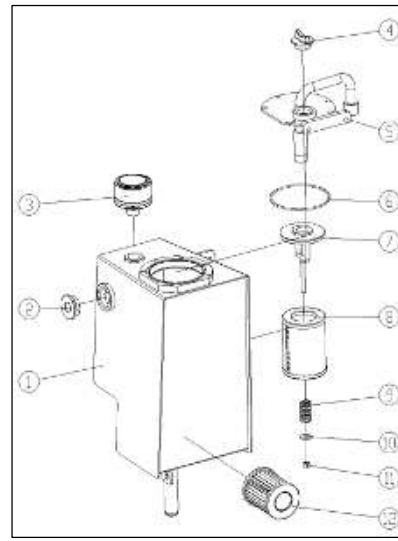

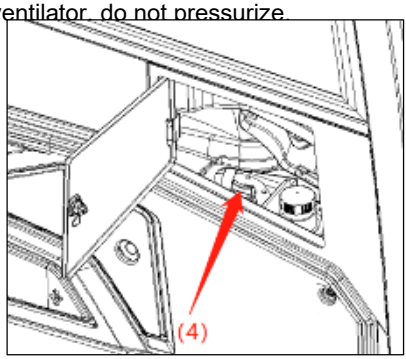

• Replace engine lubricating oil and oil filter

For details, please refer to "Replace Engine Lubricating Oil and Oil Filter" on page 5-32.

Every 50 hours

Check and adjust the tension of the track

Warning

• If you must work under a raised machine or working device, be sure to use wooden blocks, jacks or other stable and strong supports. Before it is firmly supported, it should not be under the machine or working equipment. This procedure is especially important when working with hydraulic cylinders.

• Beware of high pressure grease

In the track tensioner, grease is injected under high pressure. If you do not follow the specified procedure when adjusting the tension, the grease relief valve may fly out and cause injury.

Never loosen the grease fitting.

Slowly loosen the grease pressure relief valve. Do not turn it more than one revolution.

Do not put your face, arms, legs or body in front of the grease pressure relief valve.

If there is no grease flowing out when the grease pressure relief valve is loosened, the valve is malfunctioning, please contact Kenstone service agent for repair.

Check

1. If it is a rubber track, move the machine so that the "M" mark at the joint of the track is located in the upper center of the track frame.

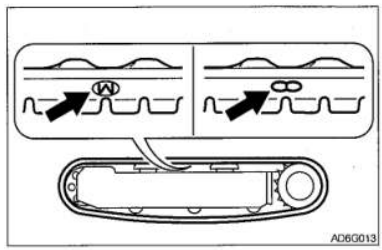

2. Use the working device to lift the body. Operate the lever slowly.

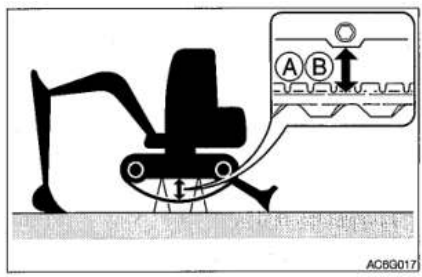

3. Check the gap (A or B) between the frame in the middle of the crawler frame and the crawler.

The gap (A or B) must be within the following range:

(A) Rubber track: 59 to 64 mm

(B) Steel track: 95 to 110 mm

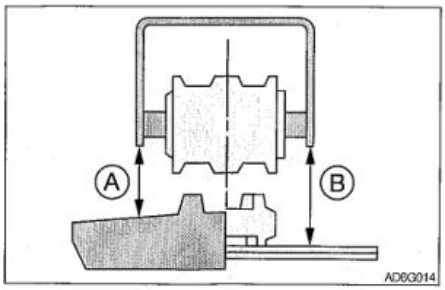

Adjustment

Increase tension

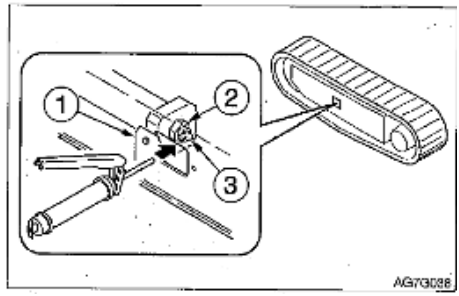

1. Remove the cover ①.
2. Using a grease gun, inject lubricating oil through the grease fitting ③ of the grease relief valve ②.
3. Check the tension of the track.

Reduce tension

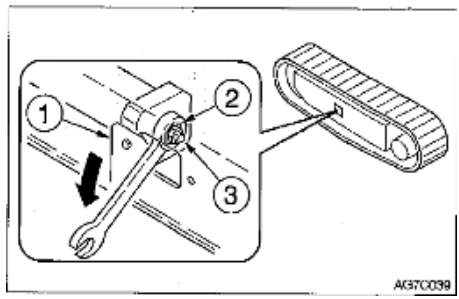

1. Remove the cover ①.
2. Use a wrench to slowly loosen (one turn) the butter pressure relief valve ② to drain the grease. If the grease is not easy to drain, move the machine back and forth.
3. Tighten the butter pressure relief valve ②.

Tightening torque: 177N˙M

Lubricated slewing support

Warning

Do not rotate during lubrication. Otherwise, you may get stuck in the machine, which is very dangerous.

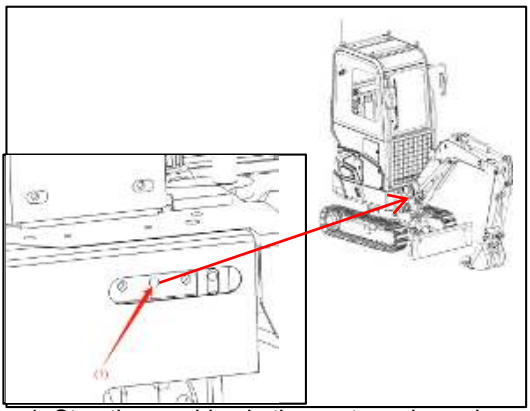

1. Stop the machine in the posture shown in the figure above, and turn off the engine.
2. Use a grease gun to lubricate the grease fittings①.

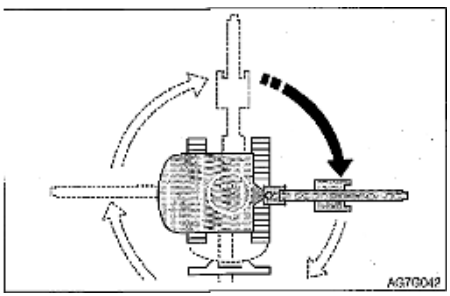

3. Start the engine, raise the bucket, and turn it clockwise 90° .
4. Lower the bucket to the ground, and then turn off the engine.
5. Repeat steps 2 to 4 above 3 times.
6. Wipe off the grease discharged from the slewing support and the grease pipe.

Lubricate the gears of the slewing motor

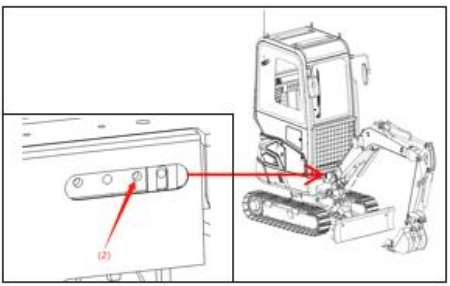

1. Use a grease gun to lubricate the grease fittings (2).
2. Wipe off excess grease.

Fuel tank drain

Warning

• When handling fuel oil or working on the fuel system, do not smoke or present open flames.

• When the engine is running or has not cooled down, do not remove the fuel tank cap or refuel. Do not spill fuel on the hot surface of the machine.

• Fill the fuel tank in a well-ventilated area.

• Don't fill up the fuel tank. There should be room for oil expansion.

• Spilled fuel should be wiped clean immediately.

• Tighten the fuel tank cap securely.

• Use the correct fuel grade according to the season.

Start the machine only after draining.

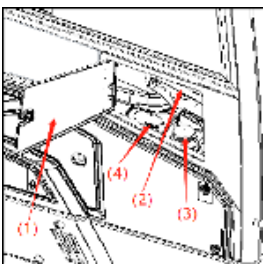

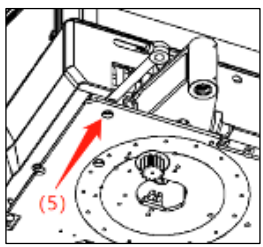

1. Rotate the upper frame to a position where it is easy to perform drainage operations.
2. Remove the fuel tank cap①.
3. Put a box under the drain plug ②.
4. Loosen the water plug ②Drain the water and the sediment accumulated on the bottom of the box.
5. Tighten the waterproof plug ②.
6. Tighten the fuel tank cap ① and lock it.
7. Exhaust the air.

Exhaust from the Fuel System

For details, please refer to "Exhaust from the Fuel System" on pages 6-8.

Note: The air in the fuel system can make the engine unable to start or start obstacles. When the fuel tank is empty, the air is discharged, and the steps are the same as above.

Check battery level and replenish

Danger

• Do not use the battery when the liquid level is below the lower limit. Otherwise, it will accelerate the internal aging of the battery and shorten the battery life. It can also cause rupture (explosion).

• The battery can generate flammable hydrogen gas, which may cause an explosion. Keep away from fire sources such as open flames, sparks or lighted cigarettes.

• Clean the area above the electrolyte level line with a damp cloth and check the level. Do not clean with a dry cloth; otherwise, it may cause static electricity to build up and burn or explode.

Warning

• Wear goggles and protective clothing when operating the battery.

• Do not add distilled water above the upper limit. Otherwise, the electrolyte will leak out. Contact with the liquid can damage the skin or corrode machine parts.

• The battery contains sulfuric acid, which can damage the eyes or skin if touched accidentally.

• If it gets into eyes accidentally, rinse immediately with clean water and seek medical attention immediately.

• If swallowed accidentally, drink plenty of water or milk and seek medical attention immediately.

• If the sulfuric acid touches the skin or clothes, wash it off immediately with plenty of water.

Check

1. Open the maintenance cover.

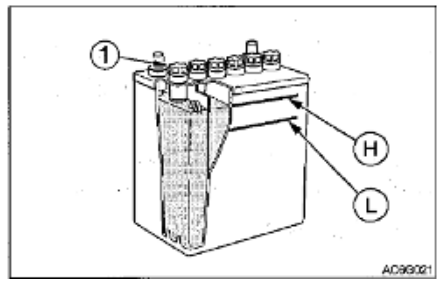

2. Check the liquid level.

The liquid level needs to be between the upper limit line (H) and the lower limit line (L). If the liquid level is not at this position, please add distilled water to the upper limit line (H).

3. Check whether the terminals are loose or dirty.

Add

If you want to add distilled water, please do it before starting operation to prevent freezing.

1. Remove the lid ①, and fill with distilled water to the upper limit (H).
2. Clean the vent hole on the cover, and then tighten the cover ① firmly.

Every 100 hours

Cleaning the water separator

Warning

• When handling fuel oil or working on the fuel system, do not smoke or present open flames.

• The engine should be turned off in a well-ventilated place, and maintenance should be performed after the machine has cooled down.

• Spilled fuel should be wiped clean immediately.

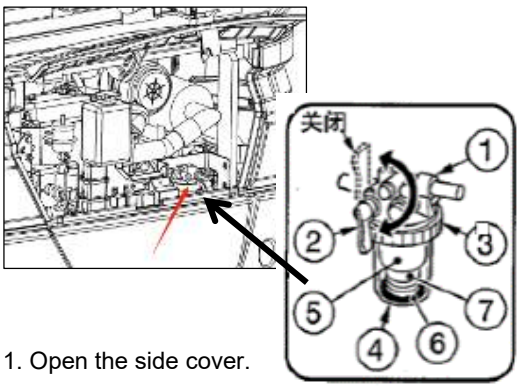

1. Open the side cover.
2. Close the valve (2).
3. Loosen the ring (3), then remove and clean the box (4), filter element (5), indicator ring (6) and spring (7).
4. Check the O-ring and filter element (5). If there are any scratches or other uneven places, replace them.
5. Install the indicator ring (6), spring (7), filter element (5) and box (4), and then tighten the ring (3).
6. Open the valve (2) for pumping.

For details, please refer to "Exhaust from the Fuel System" on pages 6-8.

After the first 250 hours (only for new machines)

• Change the gear oil of the traveling motor

Warning

• Please turn off the engine and wait for the machine to cool down before performing maintenance.
• When the engine has just turned off, the walking motor is very hot, and it will burn you if you touch it.
• The gear oil was also under high temperature and pressure when the engine just turned off. Be careful when loosening the screw plug. In this case, the operation of the machine may cause burns or injuries.
The high pressure in the reduction gear box of the traveling motor will cause the gear oil or the screw plug to fly out. Slowly loosen the screw plug to relieve the pressure.

Important: If the travel time accounts for a high proportion of the total operating time, the gear oil should be replaced earlier than the specified time.

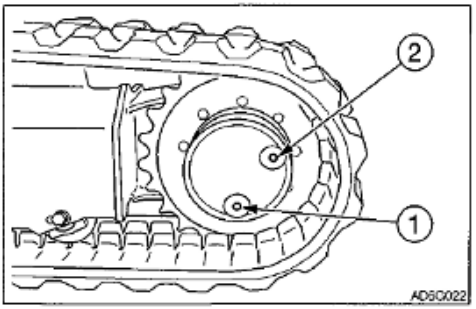

1. Adjust the position of the walking motor so that the screw plug ① is at the bottom end.
2. Put a plate under the screw plug ①.
3. Remove the screw plugs ① and ② and drain the oil.
4. Re-wrap the screw plug with a new sealing ring.
5. Tighten the screw plug ①.
6. Add oil through the screw plug hole ② until the oil flows out from the screw plug hole ②.
7. Tighten the screw plug ②.

Every 250 hours

Check and adjust the fan belt

For details, please refer to "Checking and Adjusting the Fan Belt" on page 5-24.

Replace engine lubricating oil and oil filter

Warning

Please turn off the engine and wait for the machine to cool down before performing maintenance.
The engine, exhaust pipe, radiator, hydraulic pipe, sliding parts and many other parts of the machine are very hot when the engine is just turned off. Touching these parts can cause burns.
The oil is also very hot. Be careful not to touch the hydraulic oil when loosening the cover or plug. Performing machine operations in this situation may cause burns or injuries.

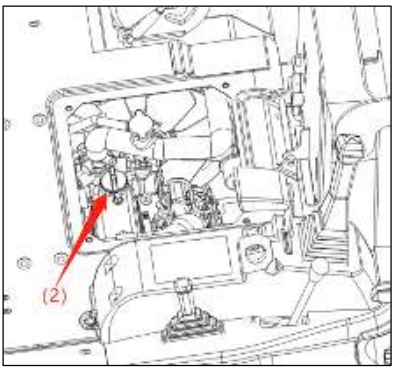

Open the upper maintenance cover and remove the fuel filler (2).
1.Place a plate under the oil drain plug (4) to hold the waste oil.
2.Rotate the oil drain plug (4) counterclockwise to remove it.
3.Important: Check for metal powder in the waste oil. If it contains a large amount of metal powder, please consult your sales or service agent.

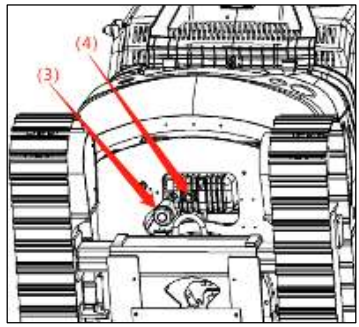

4.Turn the filter (3) counterclockwise with an oil filter wrench to remove it.
5.Clean the installation surface of the filter housing.
6.Apply a thin layer of oil to the gasket of the new filter.
7.Manually install the new filter.
8.After the filter gasket comes into contact with the installation surface, tighten it one more turn (using an oil filter wrench).
(Torque when tightening with an oil filter wrench: 19.6 to 23.5N) · m) .

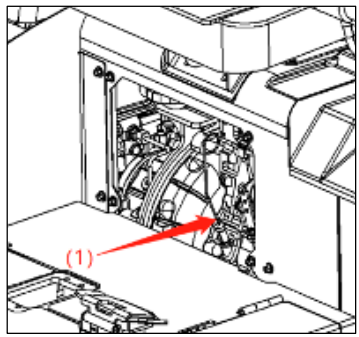

9. Add lubricating oil between the upper limit (H) and lower limit (L) of the dipstick (1). If the oil level is too low or too high, it can cause problems.
10. Tighten the fuel filler cap.
11. Start the engine and run at low idle for 5 minutes before turning off the engine.
12. After about 10 minutes, check the oil level.

Clean the air filter

Warning

- Please turn off the engine and wait for the machine to cool down before performing maintenance.
- The engine, exhaust pipe, radiator, and many other parts of the machine are very hot when the engine is just turned off. It will burn if you touch it.
- When using compressed air, please wear necessary protective equipment, such as goggles and filter masks, because metal fragments and other objects will splash and cause serious injury.

Important: Be careful not to scratch the filter element, and do not use a damaged filter.

Important: When operating the machine in a dusty environment, check and maintain the machine every day.

Important: Be sure to install the filter element and dust cover firmly. Otherwise, dust will be sucked into the cylinder, which will cause damage to the engine.

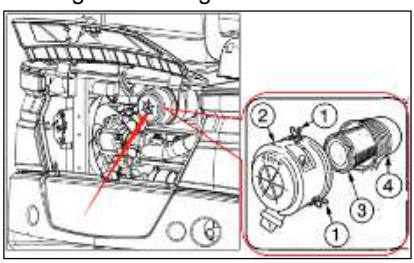

1. Open the rear counterweight door.
2. Release the buckle (1) and remove the dust collecting cup (2).
3. Clean the inside of the dust collecting cup (2).
4. Remove the main filter element (3).

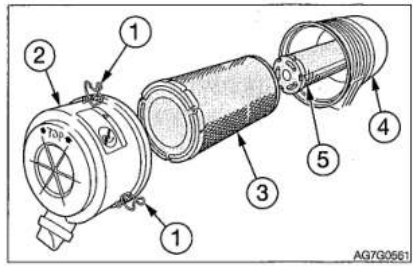

5. Cover the inlet on the back of the body (4) with cloth or tape to prevent dust from entering.

<If equipped with secondary filter>

To prevent dust from entering the engine, do not take the next filter element (5).

6. Clean the inside of the housing (4).

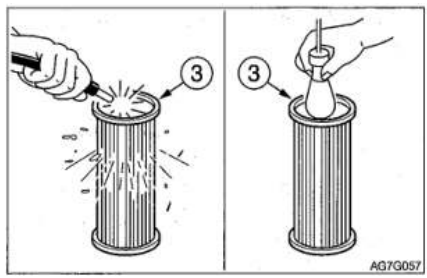

7. Clean the main filter element (3) with dry pressure air (294 to 490kPa).
First blow air from the inside of the filter element along the gathers. Then blow from the outside, and finally from the inside.
8. Use a light bulb to illuminate the inside of the main filter element (3) and perform an inspection. If any small holes or stains are found, replace it.
9. Remove the cloth or tape used in step 5.
10. Install the main filter element (3).
11. Install the dust collection cup (2) so that the "↑TOP↑" mark is facing upwards, and then fasten it with the buckle (1).

Check the throttle control system

The throttle control lever and governor located on the engine side are connected through wiring. Check if the wires are stretched and loose in their fixed position.

If the wire is stretched or loosened in a fixed position, a malfunction may occur.

The operation of replacing or adjusting wires requires experience. Please entrust your sales or service agent to do so.

Clean the hot fins of the radiator and the hot fins of the oil cooler

Warning

When using compressed air, please wear necessary protective equipment, such as goggles and filter masks, because metal fragments and other objects will splash and cause serious injury.

Important: Be careful not to damage the heat sink when cleaning.
• When using compressed air or high-pressure water, make sure that the pressure is not higher than 200kPa, and keep the air nozzle away from the radiator enough.
Important: When cleaning with water, please cover the electrical system to prevent water from entering.
Important: When operating the machine in a dusty environment, check and maintain the machine every day.

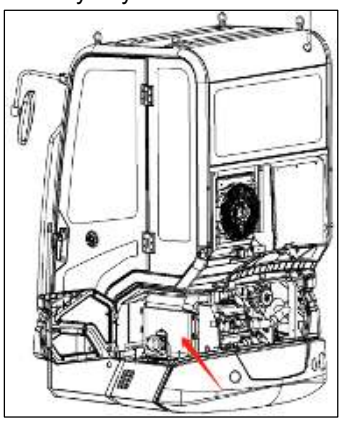

1. Open the left side cover.
2. Blow compressed air on the heat sink to blow away the dust and dirt attached to it.

Replacing the fuel filter

Warning

●Do not smoke or open flames when handling fuel or carrying out fuel system operations.
●The engine should be turned off in a well ventilated area and maintained after the machine cools down.
●The spilled oil should be wiped clean immediately.

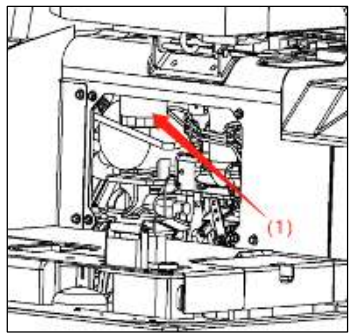

1.Open the front door.
2.Turn the filter (1) counterclockwise with an oil filter wrench to remove it.
3.Clean the installation surface of the filter housing.
4.Apply a thin layer of oil to the gasket of the new filter housing.
5.Manually install the new filter.
6.After the filter gasket contacts the installation surface, tighten it one turn. (Torque when tightening with filter wrench: 20 to 24N · m)
7.Discharge air.
8.Please refer to "Exhaust from Fuel System" on pages 6-8 for details.

Every 500 hours

• Replace the hydraulic oil tank return filter

For details, please refer to "Replace the hydraulic oil tank return filter" on page 5-25.

• Replace the water separation filter

Warning

When handling fuel oil or working on the fuel system, do not smoke or present open flames. Turn off the engine in a well-ventilated place and perform maintenance after the machine cools down.

Spilled fuel should be wiped clean immediately.

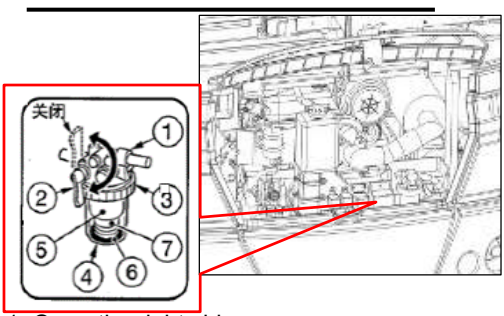

1. Open the right side cover.
2. Close the valve ②.
3. Loosen the ring ③ and remove the box ④.
4. Remove the spring ⑦ and the knowledge ring ⑥ from the box ④.
5. Cleaning box ④.
6. Check the O-ring. If there are any scratches or other uneven places, replace them.
7. Replace with a new filter element.
8. Install the indicating ring ⑥ and spring ⑦ on the box ④.
9. Install the box ④ on the bracket and tighten the ring ③ by hand.
10. Open the valve ② for air extraction.

For details, please refer to "Exhaust from the Fuel System" on pages 6-8.

Every 1000 hours

• Change the gear oil of the traveling motor

For details, please refer to "Replacing Travel Motor Gear Oil" on page 5-33.

• Replace the air filter element

Warning

Please turn off the engine and wait for the machine to cool down before performing maintenance.

The engine, exhaust pipe, radiator, and many other parts of the machine are very hot when the engine is just turned off. Touching these parts can cause burns.

Important: Do not use filter elements with damaged pleated, gaskets or seals.

Important: Be sure to install the filter element and dust cover firmly. Otherwise, dust will be discharged into the cylinder, which will cause damage to the engine.

1. Open the rear counterweight door.

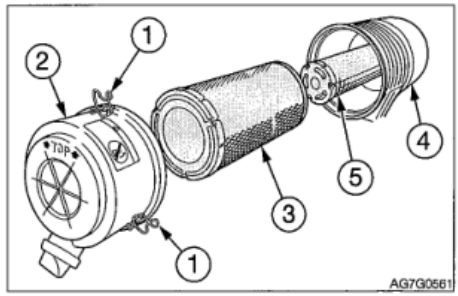

2. Release the buckle (1) and remove the dust collecting cup (2).
3. Clean the inside of the dust collecting cup (2).
4. Remove the main filter element (3).
5. Cover the inlet on the back of the body (4) with cloth or tape to prevent dust from entering.
6. Clean the inside of the housing (4).
7. Remove the cloth or tape used in step 5.
8. Install the new filter element.
9. Install the dust collecting cup (2), use the "↑TOP↑" sign to face up, and then fasten it with the buckle (1).

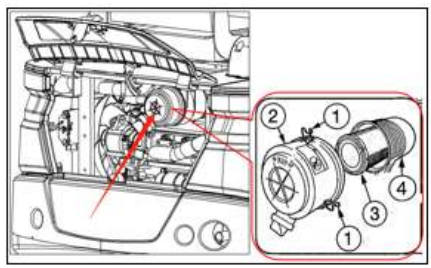

Every 1000 hours

Replace the ventilator (if equipped)

Warning

Before the hydraulic system is depressurized, if the cover or filter is removed or the pipeline is disconnected, hydraulic oil may spray out.

Slowly loosen the air plug to relieve the pressure inside the box.

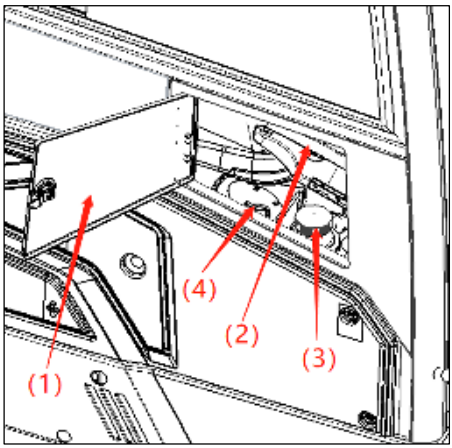

1. Open the cab side door cover (1) and upper cover (2).
2. Rotate the hydraulic oil tank cap (4) counterclockwise to relieve the pressure inside the tank, and then remove the plug.

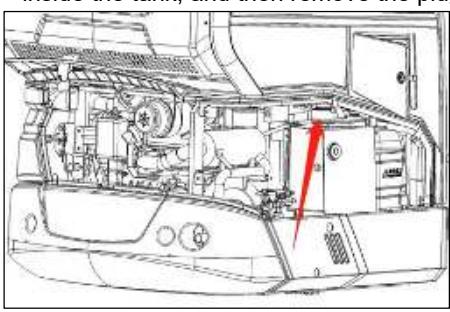

3. Remove the right cover.
4. Rotate the ventilator (5) counterclockwise with your hand or wrench and remove it.
5. Apply a thin layer of oil to the packaging of the new air conditioner.
6. Manually install a new air conditioner.拧 Tightening torque：5 N·m。

Attachment: For machines equipped with ventilators, pressurization is not required.

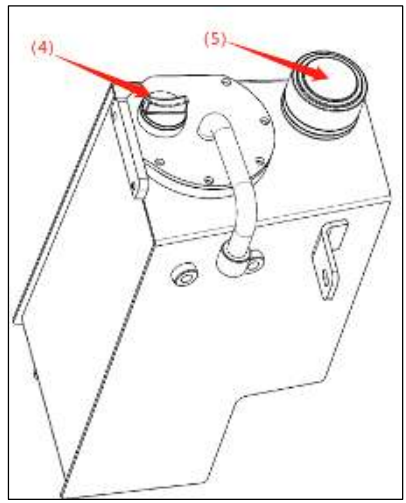

Check and adjust the engine valve clearance

This operation requires experience. Please entrust your sales or service agent to do so.

• Clean the engine cooling system

Warning

• Turn off the engine and wait for the machine to cool down before performing maintenance. The engine, exhaust pipe, radiator, and many other parts of the machine are very hot when the engine is just turned off. Touching these parts can cause burns.
When the engine just turned off, the engine coolant was also under high temperature and high pressure. Be very careful when loosening the cover or screw plug. Performing machine operations in this situation may result in burns or injuries due to splashes of high-temperature coolant.
• If maintenance must be performed while the engine is running, two people should be arranged to work in a team and maintain communication with each other.
One person must sit in the driver's seat so that the engine can be turned off immediately if necessary. This person must pay special attention not to touch the control lever or pedal, except when needed.
The other person performing maintenance needs to keep his body or clothing away from the moving parts of the machine.
• When the engine is running, it is particularly dangerous to stand behind the machine, as the machine may move suddenly. Do not stand behind the machine while the engine is running.
• When the cooling water is hot, do not remove the radiator cap or waterproof plug. Turn off the engine and wait until the engine and cooling water cool down. Then, slowly loosen the radiator cover and waterproof plug, and remove them.

When cleaning, if the coolant temperature is low, the thermostat will be turned off, and the coolant will not flow inside the radiator. Heat the coolant to at least 90° C before cleaning.

1. Raise the cab.

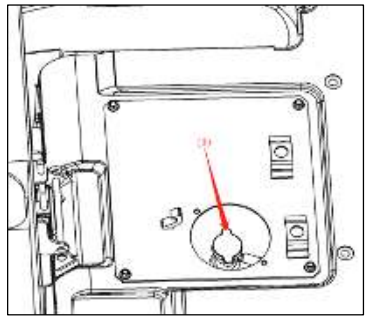

2. .Slowly loosen the radiator cover (3) to relieve the internal pressure, and then remove the cover.

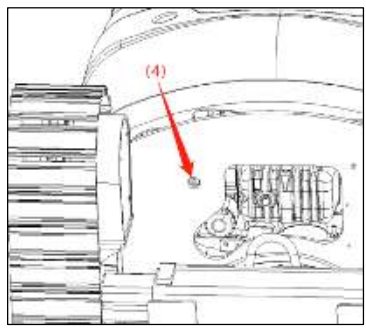

3. Place a basin under the drain plug (4) to contain the waste coolant, and then loosen the drain plug (4) to drain the coolant.
4. Tighten the drain plug (4).
5. Add tap water to the coolant filling port to the radiator until the water level reaches the top of the filling port. Do not rush or rush to add water, and do it slowly to prevent air from entering the radiator.
6. Close the radiator cover (3).
7. Start the engine and run it at a speed slightly higher than the low idle speed. Increase the water temperature to at least 90° C, then turn on the thermostat and run the engine for about 10 minutes.

8. Turn off the engine, wait until the temperature of the cooling water drops, and then remove the drain plug (4) to drain the water.
9. After draining, use detergent to clean the cooling system. When using the cleaning agent, please follow the instructions attached to the cleaning agent.
10. Repeat steps 4 to 8 to clean the cooling system.
11. Tighten the drain plug (4).
12. Fill the radiator with new coolant (antifreeze and tap water mixture) through the filling port until it is full. This process should be carried out slowly.

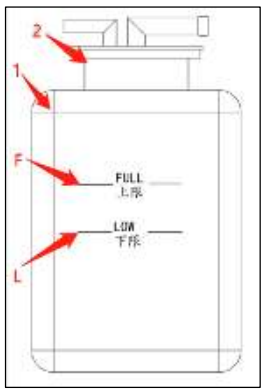

13. Close the radiator cover (3).
14. Warm up the engine. Use a meter to check whether there is any abnormality in the cooling system at this time.
15. Increase the water temperature by at least 90° C. Then, turn on the thermostat and run the engine for about 10 minutes.
16. Turn off the engine, wait until the temperature of the cooling water drops, and then check the coolant level in the radiator.
17. Close the radiator cover (3).
18. Clean the inside of the water tank (1), and then add coolant to the upper limit (H).
19. When the coolant has been replaced, please check the coolant level again after operating the machine. Once the machine starts operating, the coolant will be distributed to the entire system, so its liquid level will drop. Replenish the used cooling water.

Every 1500 hours

• Check and clean the engine fuel injector

This operation requires experience.
Please entrust your sales or service agent to do it.

• Check the crankcase vent system

This operation requires experience.
Please entrust your sales or service agent to do it.

Every 2000 hours

• Overlap engine valve seat

This operation requires experience. Please entrust your sales or service agent to do it.

• Replace the hydraulic oil and clean the suction filter

Warning

• Please turn off the engine and wait for the machine to cool down before performing maintenance.

The engine, hydraulic system, and many other parts of the machine are very hot when the engine is turned off. Touching these parts can cause burns.

Hydraulic oil is also under high temperature and high pressure. Be careful not to touch the hydraulic oil when loosening the cover or plug. Operating the machine in this situation will cause burns and injuries due to hot oil spraying.

• Before the hydraulic system is depressurized, if the cover or filter is removed or the pipeline is disconnected, hydraulic oil may spray out.

Loosen the vent plug slowly to relieve the pressure in the fuel tank.

When removing plugs or bolts or disconnecting hoses, stand on one side and loosen them slowly to gradually release the internal pressure before removing them.

1. Adjust the machine to the check posture of the hydraulic oil level.

For details, please refer to "Checking and Replenishing the Oil Level of the Hydraulic Oil Tank" on page 5-20.

2. Raise the safety lock lever to the locked position.

3. Turn over the cab.

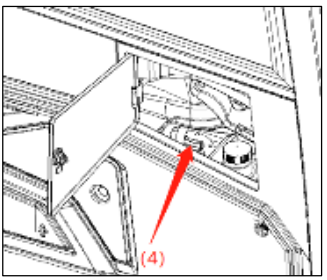

4. Slowly loosen the air plug (1) to reduce the internal pressure, and then remove the plug.

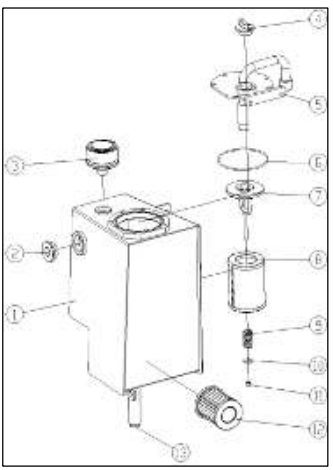

5. Loosen the hose band and remove the hose from the flange ③.

6. Loosen the bolts and take out the flange ③.
7. Remove the return oil filter ④.
8. Place a tray under the oil drain plug ⑥ to contain the waste oil.
9. Loosen the drain plug ⑥ and drain the hydraulic oil.
10. Loosen the hose strap and remove the hose.
11. Loosen the bolts and remove the flange ⑧.
12. Remove the oil suction filter ⑨ and clean it.
13. Clean the inside of the hydraulic oil tank.
14. Replace the ventilator ⑩ (if equipped).
15. Install the oil suction filter ⑨ on the flange ⑧.
16. Reinstall the flange ⑧ and hose ⑦ back to their original positions.
17. Install the new return oil filter on the flange ③.
18. Reinstall the flange ③ back to the original position.
19. Tighten the drain plug ⑥.
20. Fill the screw plug hole ① with hydraulic oil to the level between the upper limit (H) and the lower limit (L) of the level gauge ⑤.
21. Pressurized hydraulic oil tank. (If not equipped with a ventilator)
Refer to "Pressurized Hydraulic Oil Tank" on page 5-21.
Note: For machines equipped with a ventilator, there is no need to pressurize.
22. Tighten the screw plug①.
23. Bleed the air from the hydraulic oil circuit as described in the "Exhaust" section below.
24. Adjust the machine to the hydraulic oil level check posture, and check the oil level after the oil temperature drops.
For details, please refer to "Checking and Replenishing the Oil Level of the Hydraulic Oil Tank" on page 5-20.

• Exhaust

Important: After replacing the hydraulic oil, the air in the hydraulic pipeline and hydraulic device should be discharged. Otherwise, the hydraulic device may be damaged.

• Cylinder

1. Start the engine and run it at a low interest rate for 10 minutes.
2. Keep the engine running at a low idle speed, and then extend and retract each cylinder 4 or 5 times. Be careful not to extend (retract) the cylinder to the end.
3. Run the engine at high speed, and then extend and retract each cylinder 4 or 5 times. Be careful not to extend (retract) the cylinder to the end.
4. Return the engine speed to low idle speed, and then extend and retract each cylinder 4 or 5 times, and extend (retract) to the end.

When needed

• Replace bucket teeth

Please replace the bucket teeth when the gear sleeve is worn out. Do not wait until the bucket is damaged before replacing it.

Warning

• Before performing maintenance or repairs under the machine, all movable working devices should be lowered to the ground or in the lowest position.

•To prevent accidental movement of the machine when repairing or replacing bucket teeth or side teeth, the working device should be firmly fixed.

When using a hammer, tooth pins or metal chips may splash around. This may cause serious injury.

When hitting hard metal parts such as gear pins, bucket teeth, side teeth or bearings with a hammer, please wear protective equipment such as goggles and gloves.

When hitting the tooth pin or bucket tooth, make sure that no one is around.

• During operation, do not allow unauthorized personnel to enter the work area.

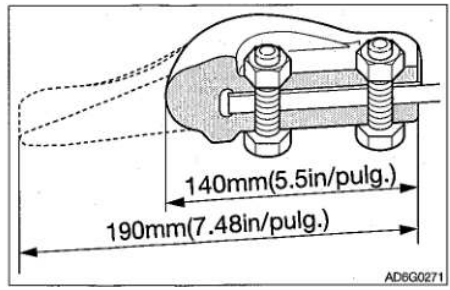

Disassemble

1. Clean the bucket and park the machine on a flat, firm and safe ground.
2. Lay the bottom of the bucket flat, and pad the bottom with a spacer to take out the bolt (1).
3. Remove the starting key, and then check whether the bucket is stable.

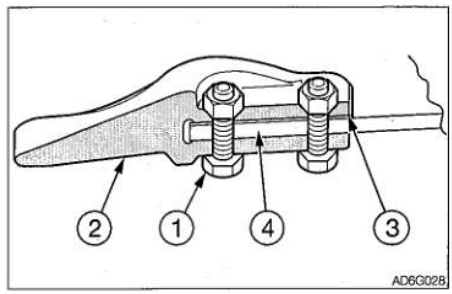

4. Remove the bolt (1).
5. Replace the bucket teeth (2) and gasket (3).

Install

1. Clean the part where the bucket teeth are to be installed. If there is gravel or dirt on this part, the tooth sleeve may not be able to enter all the way.
2. Put the bucket teeth into the bucket.
3. If the teeth are not firm, please insert a gasket to reduce the gap.
4. Insert the bolt from the outside of the bucket and tighten it with a nut.

Tightening torque: 102 N·m.

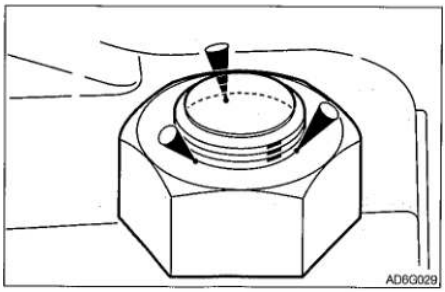

5. Use a punching machine to rivet the bolts, or perform three-point welding on the threaded part (nut end).

- **Replace bucket**

Warning

Before performing maintenance or repairs under the machine, all working devices should be lowered to the ground or in the lowest position.

If maintenance must be performed while the engine is running, two people should be arranged to work in a team and maintain communication with each other.

One person must sit in the driver’ s seat so that the engine can be turned off immediately if necessary. This person must pay special attention not to touch the control lever or pedal, except when needed.

The other person performing maintenance must keep his body or clothing away from the moving parts of the machine.

When using a hammer, tooth pins or metal chips may splash around. This may cause serious injury.

When hitting hard metal parts such as gear pins, bucket teeth, side teeth or bearings with a hammer, please wear protective equipment such as goggles and gloves.

When hitting the tooth pin or bucket tooth, make sure that no one is around.

When aligning the pin holes, check by visual inspection. Do not insert your fingers into the pin holes, or you may lose your fingers.

Disassemble

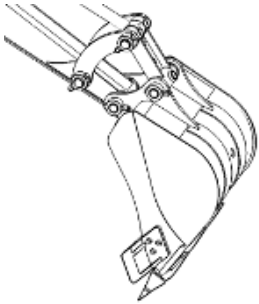

1. Lower the bucket to the ground as shown in the figure above and set it firmly.
2. Put the safety lock lever in the locked position and turn off the engine.

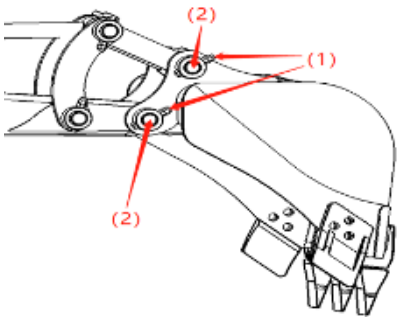

3. Remove the locking bolt (1).
4. Knock the shaft (2) down from above with a hammer.
5. Remove the bucket.

Install

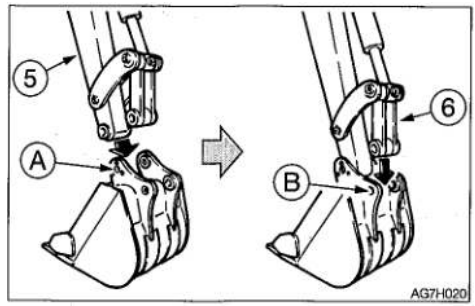

1. Align the shaft hole (A) on the bucket with the shaft hole on the stick (5), and install the shaft (2).
2. Operate the cylinder, align the shaft hole (B) on the bucket with the shaft hole on the connecting rod (6), and install the shaft (2)

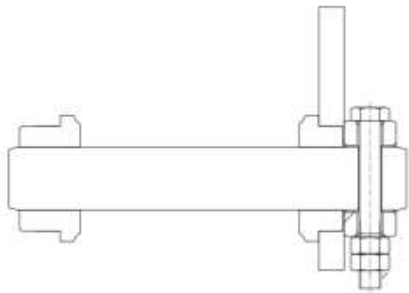

3. Align the anti-rotation holes, install the locking bolt (1), and then install two nuts and tighten them.

• Lubricate the joystick and pedal

Warning

Adjust the machine to stop, turn off the engine, remove the starting key and put it away. Otherwise, the machine may move suddenly, causing serious injury or death.

If the joystick or pedal cannot be operated flexibly, please lubricate it.

Joystick

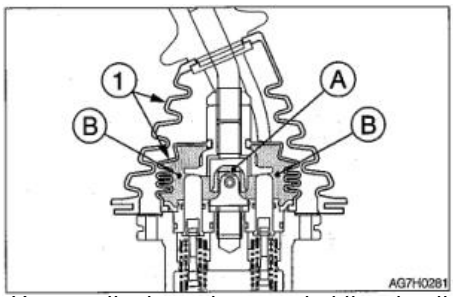

1. Remove the lower base part of the sheath (1) and turn it up.
2. Wipe off the old grease.
3. Spray grease to points (A) and (B).
4. Put the sheath (1) back in place.

Walking joystick, bulldozer joystick, pedal

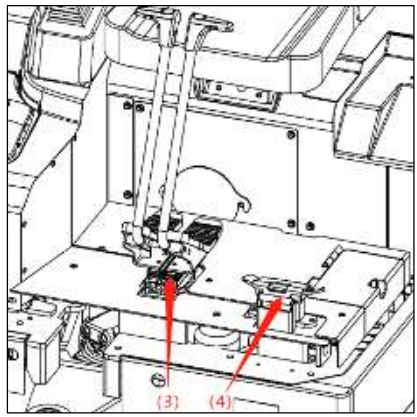

1. Remove the floor mat.
2. Remove the lower base part of the sheath (3) and turn it up.
3. Wipe off excess grease.
4. To install, follow the same procedure as the removal step and operate in reverse order.

- **Check the rubber track**

If the condition of the rubber track becomes as shown below, repair or replace it. For details about repair or replacement, please consult your dealer or service agent.

Rubber track

If the entire track is stretched and cannot be adjusted, replace the track.

(1) Rubber

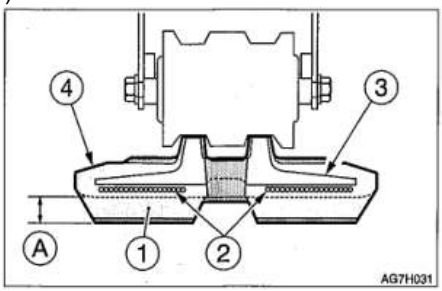

If the height of (A) is 5 mm or less, replace it.

(2) Steel rope

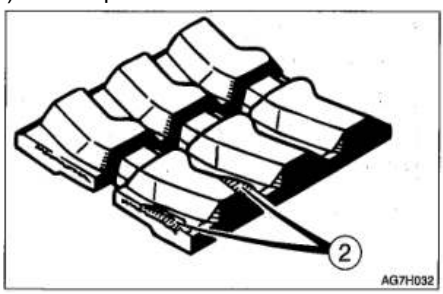

If two or more sections of the steel rope are exposed, replace them.

If more than half of the side of the rope is cut, replace it.

(3) Metal core

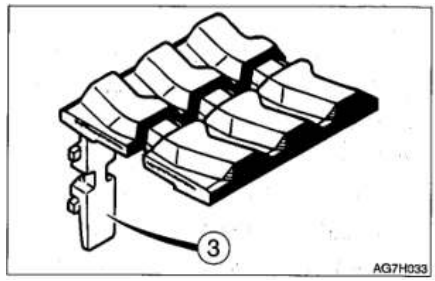

Even if a metal core falls off, replace it.

(4) Rubber

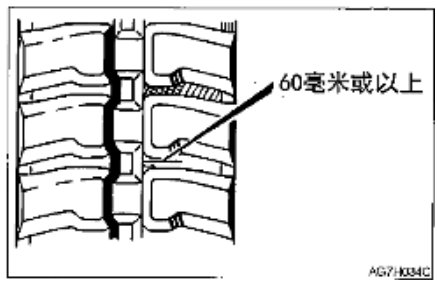

If the crack length is 60 mm or longer, please repair it. If the steel rope is visible, regardless of the length of the crack, please repair it as soon as possible.

• Replace rubber track

Warning

If you must work under a raised machine or working device,

Be sure to use wooden blocks, jacks or other stable and strong supports. Before it is firmly supported, it should not be under the machine or working equipment.

If maintenance must be performed while the engine is running, two people should be arranged to work in a team and maintain communication with each other.

One person must sit in the driver’ s seat so that the engine can be turned off immediately if necessary. This person must pay special attention not to touch the control rods or pedals, except when needed.

The other person performing maintenance must keep his body or clothing away from the moving parts of the machine.

Disassemble

1. Completely relax the tension of the rubber track.

For details, please refer to "Checking and Adjusting Track Tension" on page 5-

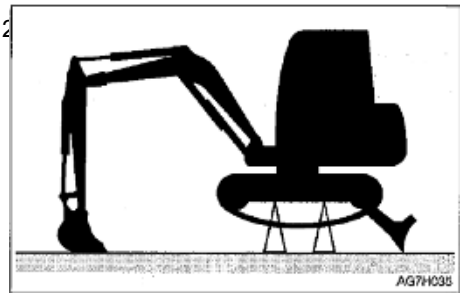

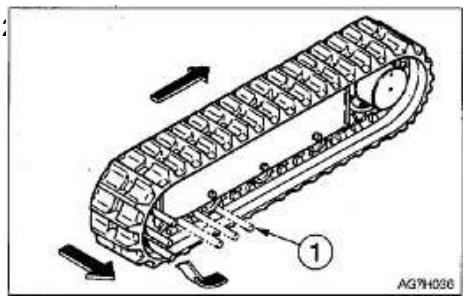

3. Place an iron pipe (1) in the rubber track and slowly turn the sprocket in the opposite direction.

4. Turn the sprocket until the iron pipe (1) is close to the tensioner and the rubber track is lifted away from the tensioner, then stop rotating the sprocket.

5. Slide the rubber track laterally and take it out of the track frame. Follow the same procedure to take out another rubber belt.

Install

1. Use the working device to lift the body.

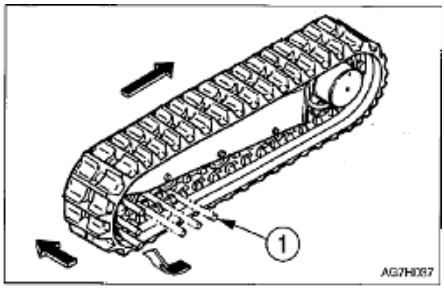

2. Place a rubber track on the sprocket.
3. Place an iron pipe (1) in the rubber track and slowly turn the sprocket in the opposite direction.
4. Rotate the sprocket until the iron pipe (1) is close to the tensioner and the rubber track is lifted away from the tensioner, then stop rotating the sprocket.
5. Slide the rubber covering belt inward, attach it to the tensioner, and then pull out the iron pipe.
6. Check whether the rubber track is firmly installed on the sprocket and the tensioner.
7. Tighten the rubber track to the standard tension.

   For details, please refer to "Checking and Adjusting Track Tension" on page 5-27.

8. Follow the same procedure to install another piece of rubber track.

• Check and replenish glass cleaning fluid

Warning

Choose ethanol as the washer solution. Do not use methanol as a washer solution, it will hurt your eyes.

Please use glass washer fluid specially designed for motor vehicles, please follow the instructions that come with the glass fluid.

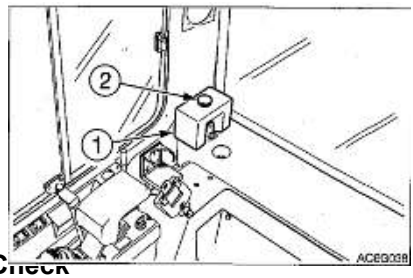

Check

1. Open the cab door.
2. Check the cleaning liquid tank (1), if the liquid level is low, add cleaning liquid.

Add

1. Mix the cleaning solution to the specified concentration.
2. Remove the cover (2) and add the cleaning fluid. During the replenishment of the cleaning fluid, please do not allow dust to enter.
3. Put the cover (2) on.

Maintenance during long parking periods

• Parking procedure

If you need to park the machine for 30 days or more, please park it indoors. If it must be parked outdoors, the machine should be parked on a flat surface paved with wooden boards and covered with a waterproof cover to keep it dry.

1. Clean the machine.
2. Check for oil leakage, water leakage, cracking, and loosening of nuts and bolts.
3. Add fuel and change hydraulic oil and lubricating oil.
4. To prevent rust and icing, the engine coolant should be replaced with long-life coolant (LLC).
For details, please refer to "Cleaning the Engine Cooling System" on page 5-35.
5. Use a grease gun to lubricate the grease fittings.
6. Fully retract the bucket and stick cylinder, and lower the bucket and dozer to the ground.
7. Coat the hydraulic cylinder with anti-rust oil.
8. Disconnect the battery negative cable and cover the battery to prevent freezing.

• During parking

Warning

• Do not operate the machine in a closed place with poor ventilation.
• If natural ventilation is not possible, ventilation fans, fans, extended exhaust pipes or other ventilation devices should be installed.

1. To prevent rust, the machine should be operated once a month so that the lubricating oil can circulate throughout the system.
2. Check battery; charge if necessary.
Please entrust your sales or service agent to charge.

• Starting of the machine after parking

Important: During the long-term parking of the machine, if the above "parking procedure" is not followed, please consult your sales or service agent before starting the machine again.

1. Wipe off the anti-rust oil on the piston rod of the hydraulic cylinder.
2. Add lubricating oil or grease when necessary.

Maintenance during long parking periods

• Put the engine back into service

1. Perform daily inspections.

2. The engine should be pre-lubricated before starting.

a. Shake the engine and keep the fuel system off so that the engine will not be started. Keep this process for 15 seconds.

b. Then stop for 30 seconds.

c. Repeat the procedure until the engine has been shaken for a total of 1 minute. This allows the oil to circulate fully in the engine lubrication system. 3. Make the fuel system ready.

4. Start the engine. Run the engine at idle speed for about 15 minutes. At this time, please check:

Whether the oil pressure is normal.

Whether there is leakage of fuel, engine lubricating oil or coolant

Whether the indicator light and the level gauge are working properly.

5. Avoid operating for a long time at the minimum or maximum engine speed and load the remaining loads in the first hour of operation.

TROUBLESHOOTING

Symptoms that are not malfunctions

The following symptoms are not faults

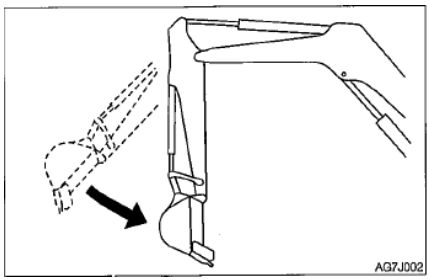

- When the engine is running at low speed, when the arm reaches an almost vertical position, its retraction speed will drop briefly.

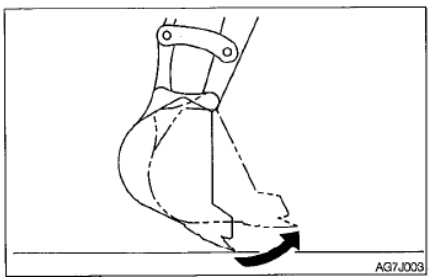

- When the engine is running at low speed, when the tooth reaches an almost horizontal position, its moving speed will drop briefly.
- At the beginning and end of the swing, the swing motor makes noise.
- When a sudden stop occurs during high-speed walking, the walking motor makes noise.
- When the working device is subjected to excessive external force or when it moves to the end of the stroke, the control valve makes noise.
- When an accessory that is heavier than a standard stick or bucket is installed, operating the machine is more laborious than before.

If the engine is overheated

Warning

- Do not open the engine cover when steam is coming out. Steam or hot water may spray out, causing burns.
- Do not remove the radiator cap or drain plug when the cooling water is hot. Turn off the engine, wait for the engine and radiator to cool down, and then slowly loosen the radiator cap to release the internal pressure.
- During maintenance, turn off the engine and wait for the machine to cool down before proceeding.

The following symptoms indicate overheating.

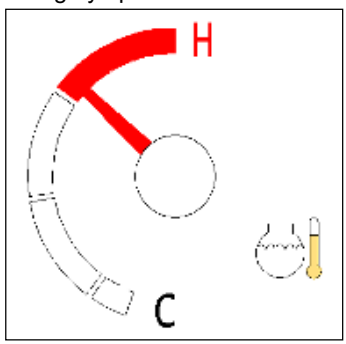

- If the water temperature gauge shows that the water temperature is between 40℃-102, it means that the water temperature is normal during the operation. If the water temperature gauge shows that the water temperature exceeds 102, it means that the water temperature is too high. The engine water temperature alarm icon shows that the monitor sounds an alarm.
- When the alarm sound is heard, the engine emergency warning light and the coolant temperature warning light start to flash at the same time.
- Steam came out of the engine room.

Remedial procedure

1. Park the machine in a safe place.
2. Check to see if steam comes from the closed engine cover and lid.
3. If steam comes out, immediately turn off the engine and contact your sales or service agent for repairs. If no steam comes out, please run the engine at a low idle speed to let the water temperature drop.
4. When the water temperature gauge LED falls to the green area, turn off the engine.
5. After the engine has cooled down, immediately perform the following inspection and remedial measures.

The fan belt is loose...adjust (refer to page 5-24)

Coolant level is low... add coolant (refer to page 5-18)

Leaking..... Repair

Dirty radiator heat...clean (refer to page 5-37)

The cooling system has deposits...clean (refer to page 5-42)

If the fault still exists after performing the above remedial procedures, please contact your sales or service agent for repair.

If the battery is dead

The following symptoms indicate that the battery has no power:

- The starter motor does not rotate or cannot start the engine.
- The sound of the horn is very small.

Remedial procedure

Start the engine using the booster bottle and jumper cables on other machines (boost machines).

Warning

- When using a jumper cable to start the engine, be sure to follow the correct steps to connect the cable. Improper use of jumper cables can cause battery explosions or unexpected machine movements.
- Booster machines and machines with non electric batteries (non electric machines) are not allowed to come into contact with each other.
- The positive (+) and negative (-) clamps of the jumper cable are not allowed to come into contact with each other.
- When connecting, first connect the jumper cable to the positive (+) terminal. When disconnecting, first remove the cable from the negative (-) terminal (ground).
- The final clamp for connecting the jumper cable should be as far away from the battery as possible.
- Always wear protective goggles when using a jumper cable to jump start the engine.

Important: The size of the jumper cables and clamps used should be suitable for the battery capacity. Do not use damaged or corroded jumper cables and clamps.

Important: Ensure that the battery of the charging machine has the same capacity as the battery without an electrical machine.

Important: Be sure to connect the cord clamp securely.

Connect the jumper cable

Important: Turn the charging machine and the starter key without a motor to the OFF position.

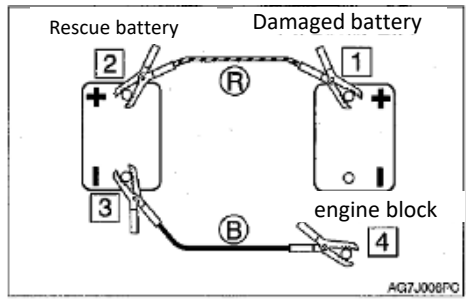

1. Connect the clamp of the jumper cable (R) to the positive (+) electrode of the motorless machine.
2. Connect the other clamp of the jumper cable (R) to the positive (+) electrode of the booster.
3. Connect the clamp of the jumper cable (B) to the negative (-) electrode of the charger.
4. Connect the other clamp of the jumper cable (B) to the engine support without an electric machine. Connect the clamp, the connection point is as far away as possible from the battery.

Start the engine

1. Check whether the wire clamp is firmly connected to each terminal.
2. Start the engine of the charging machine and run it at high speed.
3. Start the engine without an electric machine.

If the battery is dead

Disconnect the jumper cable

After the machine without power is running successfully, follow the same steps as the connection and remove the jumper cable in the reverse order.

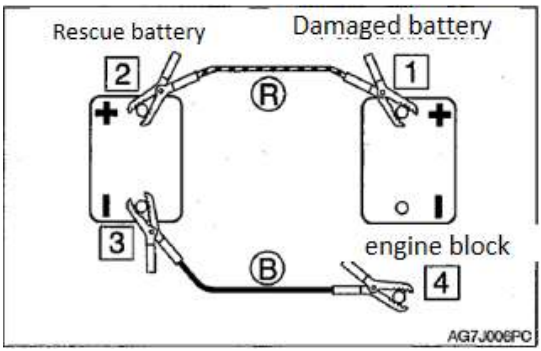

1. Disconnect the clamp of the jumper cable (B) from the engine support without an electric machine.
2. Disconnect the other clamp of the jumper cable (B) from the negative (-) electrode of the charger.
3. Disconnect the clamp of the jumper cable (R) from the positive (+) electrode of the charger.
4. Disconnect the clamp of the jumper cable (R) from the positive (+) electrode of the motorless machine.

Recharge

Ask your sales or service agent to recharge the battery without battery.

If the fuse blows

If the light does not turn on or the electronic system does not work, the fuse may be blown.

Check the fuse.

Check and replace the fuse

Warning

If the fuse blows again soon after being replaced, the electronic system may malfunction. If it is not properly repaired, it may cause a fire hazard. For inquiries, please contact your sales or service agent.

1. Turn off the engine
2. Open the fuse cover.

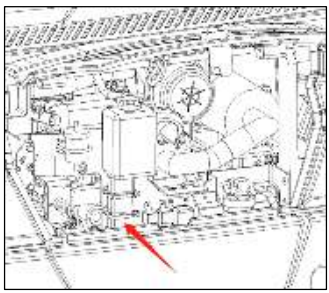

3. Check if there is a blown fuse.

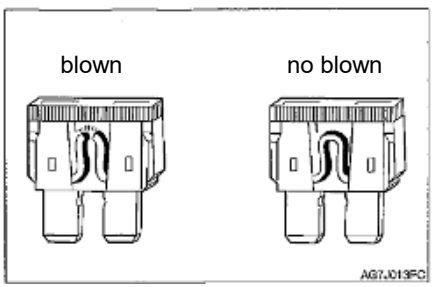

4. If the fuse is blown, replace it with a spare fuse of the same specification.

Fuse arrangement and its protection circuit

Ampere	Circuit
20A	灯电源
20A	收音机
20A	高低速
20A	点烟器
20A	风扇
20A	室内灯
20A	喇叭电源
20A	电磁阀
20	雨刷清洗
60A	起动机B
40A	发电机B

If the fuse blows

Check the fuse

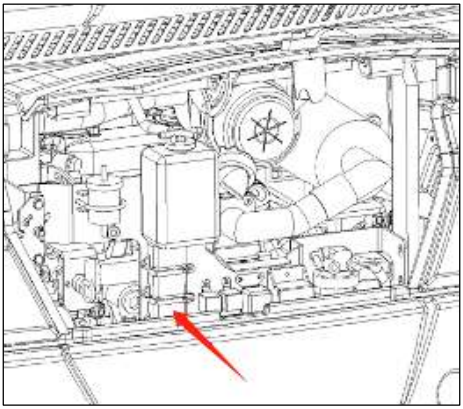

If the machine does not start after turning the start switch to the ON position, the filter cartridge fuse (1) may be blown. Open the service cover and check. If the fuse has blown, please contact your sales or service agent.
Attachment: The fuse is a large fuse used in high current applications. Like ordinary fuses, they play a role in preventing excessive current and protect electrical components and wiring from damage caused by excessive current.

Restart after fueling

Exhaust from the fuel system

Important: Never use the starter motor to turn the engine so that the fuel system is ready. This may cause the starter motor to overheat and damage the coil, pinion or ring gear.

Important: If the engine stalls due to fuel shortage, add fuel, turn the key to the ON position for 60 seconds, and then turn it to the START position. If the starter motor is operated for a long time before sufficient fuel enters, the starter motor will fail to start.

1. Add fuel.

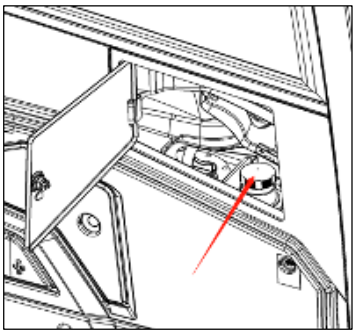

2. Open the valve ② of the oil-water separator.

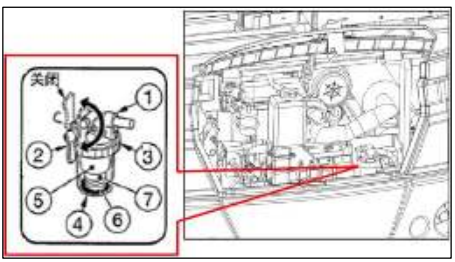

3. Turn the starter key to the ON position and hold it for about 60 seconds.

The automatic exhaust valve exhausts the air from the fuel system.

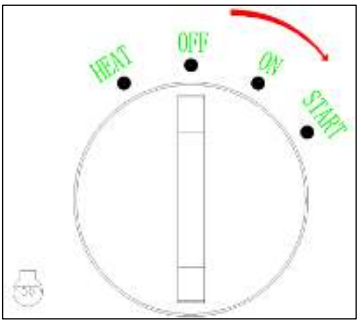

Note: The air in the fuel system can make the engine unable to start or have other problems. When the fuel tank is emptied or there is air in the fuel system, it must be exhausted.

If the warning light flashes

During the operation, if you hear the alarm sound or the alarm light starts to flash, you should stop the machine in a safe place and perform the following remedial procedures.

Alarm	Icon indication	Causes and solutions
	Charging	There is a problem with the fan belt or charger. Check if the fan belt is loose or broken, and adjust if necessary. If the light continues to flash after maintenance, there may be a problem with the charger. If you need help, please consult your sales or service agent. For details, please refer to "Checking and Adjusting the Fan Belt" on page 5-24.
	oil pressure	There is a problem in the engine lubrication system. Check the engine oil level. If the light flashes when the oil level is normal, or the light still flashes after replenishing the oil, please consult your sales or service agent. For details, please refer to "Checking and Replenishing Engine Lubricating Oil" on page 5-19.
	Coolant temperature	The coolant temperature is too high and the engine is overheating. For details, please refer to "If the Engine Overheats" on page 6-3.
	Fuel level	The fuel level is too low. Need to add fuel. For details, please refer to "Checking the Fuel Level" on page 5-19.

Other symptoms

For symptoms not listed in the table below, or if the problem persists after taking appropriate solutions, please consult your sales or service agent.

Symptom	Causes	Solutions
The left and right joysticks cannot move flexibly Dozer blade control lever and throttle control lever cannot move flexibly	● Lack of grease on left and right joysticks ● The wires are too loose	● Lubricate the joystick See page 5-52. ● Adjust or replace (consult your sales or service agent).
Bucket, slewing or walking operations cannot be performed	● The safety lock lever has been raised (locked) ● Fuse blown ● The travel lock adjustment is faulty	● Lower (release) the safety lock lever. Please refer to page 2-16. ● Replace the fuse. Please refer to pages 6-6. ● Adjust the walking lock (consult your sales or service agent).
Not enough digging power	● Hydraulic oil level is too low ● The hydraulic oil is not hot enough ● Air filter is clogged ● Incorrect hydraulic oil type	● Add hydraulic oil to the specified level. Please refer to page 5-20. ● Warm up. Please refer to page 3-8. ● Clean the air filter. Please refer to page 5-35. ● Replace hydraulic oil. Please refer to page 5-46.
Unable to walk or inflexible	● Stone or foreign object stuck	● Remove foreign objects
Lean to the left or right when the machine goes straight	● A stone or foreign object is stuck. ● The track tension adjustment is faulty	● Remove foreign objects ● Adjust the track to the specified tension. Please refer to page 5-27.
Can't change walking speed	● Fuse blown	● Replace the fuse. Please refer to pages 6-6.
Can't turn or turn inflexibly	● Insufficient grease for slewing support	● Lubricate the bearings See page 5-29.

Other symptoms

Symptom	Causes	Solutions
The hydraulic oil temperature is too high	● Hydraulic oil level is too low	● Add hydraulic oil to the specified level. Please refer to page 5-20.
The starter motor rotates but the engine does not start	● Insufficient fuel ● There is air in the fuel system ● Water in the fuel system	● Add fuel. Please refer to pages 5-19. ● Exclude air. Please refer to pages 6-8. ● Drain the water. Please refer to pages 5-30.
Tracks fall off	● Tracks are too loose	● Increase the tension. Please refer to page 5-27.
The engine often emits black smoke	● Air filter is clogged	● Clean the air filter. Please refer to page 5-35.
Engine exhausts white or blue smoke	● Too much oil ● Inferior fuel	● Adjust to the specified liquid level. Please refer to pages 5-19. ● Change the fuel.
The engine produces irregular noise (combustion or mechanical noise)	● Inferior fuel is being used ● Engine overheated ● Internal damage of exhaust pipe	● Change fuel ● For details, please refer to "If the Engine Overheats" on page 6-3. ● Replace the exhaust pipe. For replacement, please consult your sales or service agent.

Towing

Warning

When towing, improper operation, improper rope or improper rope inspection can cause serious injury or death.

- If the rope breaks or becomes dangerous, please use a rope that matches the traction.
- Do not use kinked, twisted or damaged cables.
- Do not suddenly put a heavy load on the rope.
- When handling the rope, wear safety gloves.
- Make sure that there is an operator on the towing machine and the machine being towed.
- Do not tow on slopes.
- When towing, no one should approach the rope.

Important: If the engine does not start or the machine is not running, do not tow the machine. Doing so may damage the towed machine.

Important: When using the towing hole to tow, be sure to strictly follow the following steps. If you do not pay attention to any of these steps, it may cause damage to the traction hole or other parts of the frame.

Towing machine

Use the following procedure to tow heavy objects or machines that are stuck in the mud and cannot drive out of their own accord.

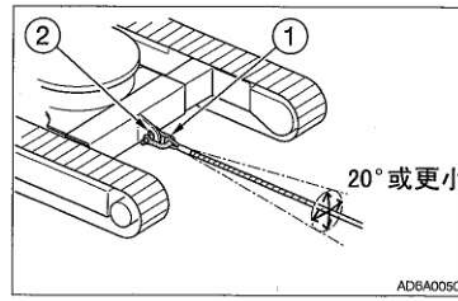

- Allowable force: 28.2 KN

1. Tie the cable to the shackle (1).
2. Hook the shackle (1) to the towing hole (2).
3. Make sure that the cable and the walking frame maintain a cone angle of 20° or less.
4. Move the machine and tighten the cable.
5. Move the machine at a low speed of 2 km/h or lower to a location short of the site (a place that is convenient for maintenance).

If the cab or canopy is damaged

Warning

Replace the damaged cab or canopy immediately. If you operate in a damaged cab/top, serious personal injury or death may occur.
Do not operate the machine until the replacement is completed. Do not attempt to repair a damaged cab or canopy by welding. Doing so may endanger the safety of the cab/top.

<Applicable model RH22>
*Cab part number: 0301120080
RH22 cab

PARAMETER

Main parameter

Item		Unit	Data
machine weight		kg	2060
bucket capacity		m^3	0.03
type			backhoe
engine	model		kubotaD1105-E4
	displacement	L	1.123
	rated power	kw/rpm	14/2200
	Max. Torgue /speed	N.m	70.3/1600
	Starter	V-kW	12-1.2
	generator	V-W	12-480
	Accumulator	V-Ah	12-65
Speed and digging force	Traveling speed	km/h	3.3/2.2
	Rotating speed	rpm	10.5
	Gradeability		30%
	bucket digging force	kN	13.5
	arm digging force	kN	10.5
	Max. traction	kN	10.3
dimension	overall length	mm	3475
	overall width	mm	1075(1275)
	overall height	mm	2455
	dozer max. digging depth	mm	180
	dozer max. lifting height	mm	275
Tracks	Ground pressure	kPa	35.6
	track material		rubber / steel
	Tensioner		Butter cylinder
Hydraulic system	Pump type		plunger pump
	Working pressure	MPa	22
Liquid capacity	Hydraulic oil tank capacity	L	15.3
	Engine oil capacity	L	2.8(1.3)
	Fuel tank capacity	L	18

All rated operations of the machine are based on the machine working on a solid horizontal support surface. If the machine's operating environment conditions are different from the above reference conditions (such as working on uneven ground or slopes), the operator should consider these conditions .

Main Parameter

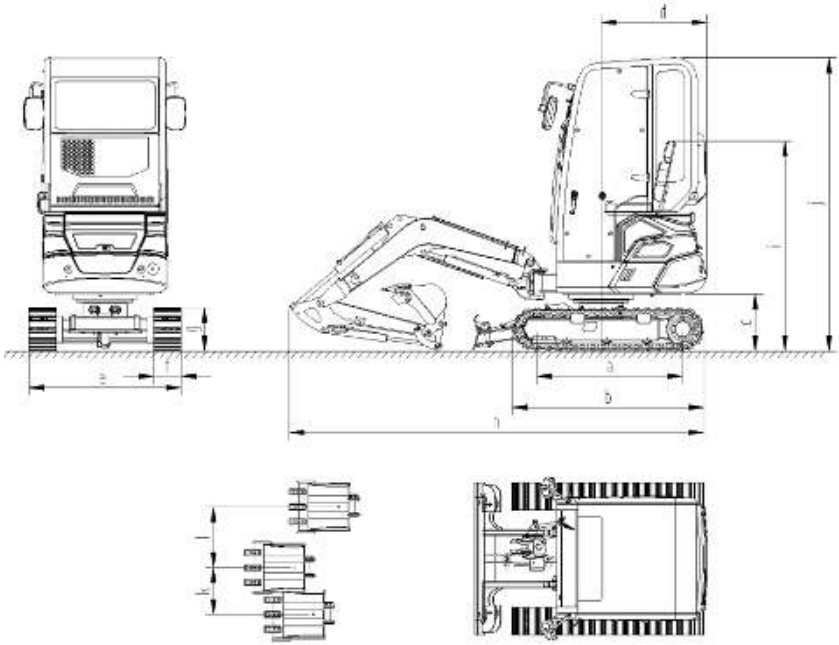

Dimension		unit: mm
a	wheel base	1230
b	track total length	1590
c	Platform ground clearance	473
d	rotation radius	885
e	chassis width	1025 (1275)
f	track width	230
g	track height	360
h	transportation length	3475
i	seat height	1750
j	overall height	2455
k	boom swing left	390
l	boom swing right	510

The scope of work

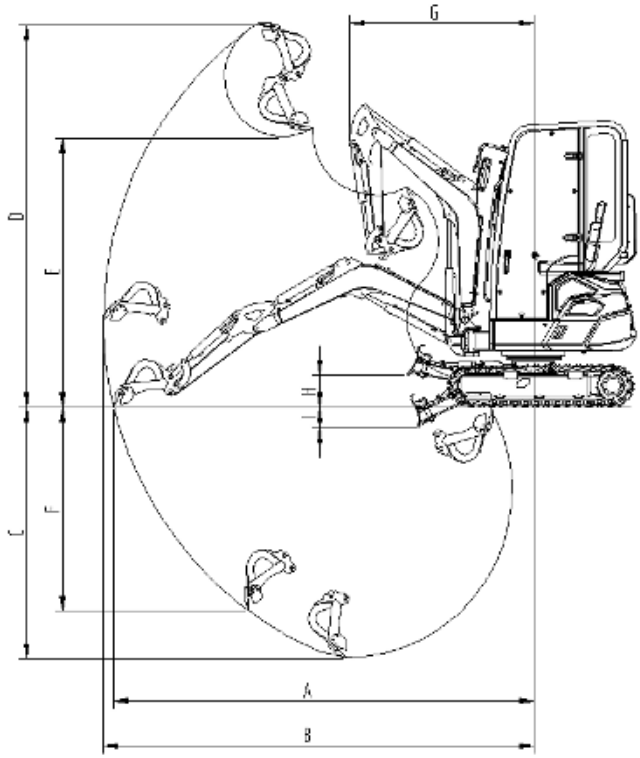

The scope of work		unit: mm
A	Max. ground digging radius	3610
B	Max. digging radius	3700
C	Max. digging depth	2150
D	Max. digging height	3275
E	Max. dumping height	2310
F	Max. vertical digging depth	1740
G	Min. rotating radius	1580
H	Max. lifting height of the bulldozer	275
I	Max. digging depth of the bulldozer	180

Lift capacity（Kg）

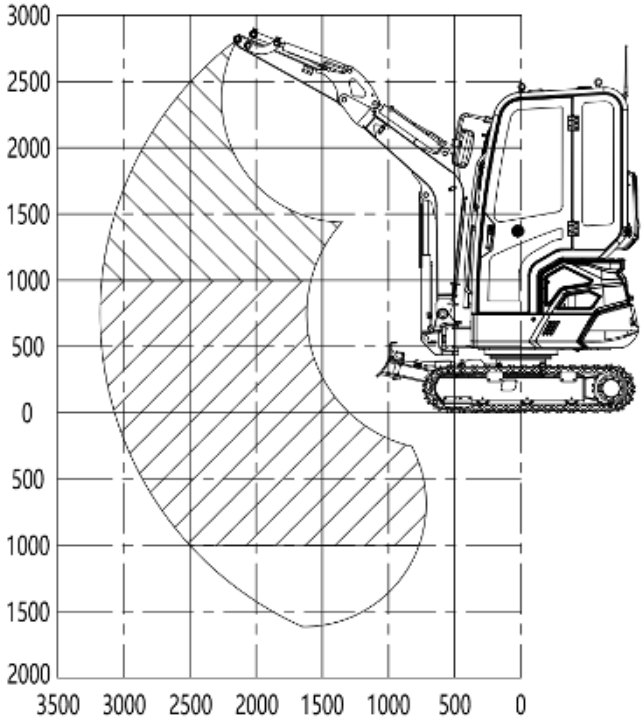

LD		1.5m	2m	2.5m	3m	MAX
	Z2	624	421	274		
	Z1	696	460	381	350	
	Z3	545	460	381		

Vibration and ear noise:

A-Weighted emission sound pressure level at the operator's position measured according to work cycle procedures specified in “ISO 6396 “ is 78dB(A),

The hands and arms are exposed to a weighted root mean square acceleration that is less than 2.5 m/s2.

The body is exposed to a weighted root mean square acceleration that is less than 0.5 m/s2.

Mesurements are obtained on a representative machine using the procedures in the following standards:

''ISO 2631-1"

''ISO 5349-1"

''ISO 5349-2"

ACCESSORIES

General safety measures

When removing or installing accessories or options, please take the following safety measures.

●Please consult Kenshi Heavy Industry before installing options.

●Do not use any accessories that are not approved by Kenshi Heavy Industries, otherwise it may cause safety problems or negatively affect the operation or service life of the machine.

●Kenstone Heavy Industries is not responsible for injuries, accidents or product damage caused by the use of unauthorized accessories.

●Choose a stable and flat work area, and be sure to stop in a well-ventilated place.

●Remove obstacles and dangerous goods, and immediately clean up the spilled fuel.

●When hoisting, be sure to designate one person as the signalman. For specific procedures and measures, please follow the signalman's instructions.

●In the process of disassembly or installation, when heavy objects or accessories need to be temporarily placed on the ground, be sure to place them in a stable place.

●When hoisting, all personnel should stay away from the work area. The work area may be dangerous due to falling objects or contact with people.

●Use a crane to move heavy objects (25 kg or heavier).

●Before moving heavy objects, be sure to support them first. When using a crane to lift objects, please pay attention to the center of gravity of the load and keep the machine balanced.

●Do not operate the machine when the crane is lifting the load.

●Please follow the correct procedure when installing the boom or stick, otherwise it may cause serious injury. If you need help, please consult your sales or service agent.

Precautions when installing work equipment

After changing accessories or other special accessories, be sure to perform a trial run. Check the hydraulic oil level and add oil if necessary. For detailed procedures for installing/removing accessories, please consult your sales or service agent.

Precautions when operating accessories

Lengthening the attachment will reduce the stability of the machine. When the machine is walking or turning on a steep slope, if it loses its balance, it may tip over. Do not perform the following operations, otherwise it is extremely dangerous.

Steep slope when the attachment is lifted

Crossing steep slopes

Rotate on a steep slope

If heavy accessories are installed, the overshoot of the machine before it stops completely will be greater than usual when the machine is stopped. Please carefully consider the relevant distance to avoid hitting objects around the machine. Keep a safe distance from surrounding obstacles. When a heavy accessory is installed, the natural descending process (when stopped in the air, the accessory slowly descends under its own weight) will also speed up.

The machine is more likely to tip over in the horizontal direction than in the vertical direction.

(1) When the bucket operating device is heavily loaded, it cannot turn sideways. In particular, it cannot be turned sideways on the slope.

(2) The accessories of the machine with the breaker or the crusher are heavier than when the standard bucket is installed. Do not operate such machines sideways, especially when digging downhill.

When an extended arm is installed, the operating range will increase. Please carefully consider the relevant distance to avoid hitting obstacles around the machine and keep a safe distance from the surrounding obstacles.

General safety measures

Warning

●Please consult Kenshi Heavy Industry before installing options.

●Do not use any accessories that have not been approved by Kenshi Heavy Industry, otherwise it may cause safety problems. Or it will have a negative impact on the operation or service life of the machine.

●Kenstone Heavy Industry is not responsible for injuries, accidents or product damage caused by the use of unauthorized accessories.

●When installing a bucket wider than 450M, a swing stopper must be installed. Failure to install the swing stopper may cause the bucket to hit the machine body.

Precaution when operating

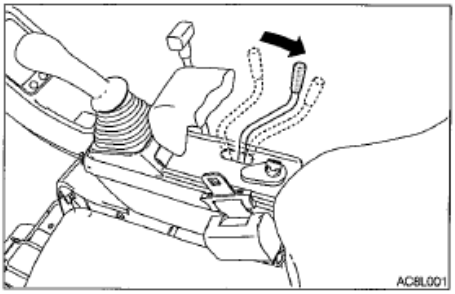

(1) Start the engine and run at 75% of its maximum speed.

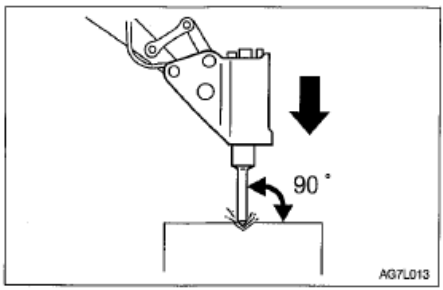

(2) Use drill rods perpendicular to the working surface for crushing operations.
(3) When crushing, the drill rod should be properly aligned with the object to

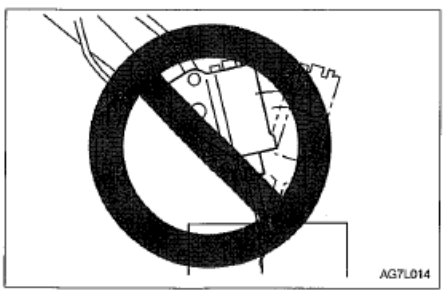

（4) Do not pry with a drill rod, and do not pry when it is broken.
(5) Do not move the hammer head when breaking.
(6) Do not continue to impact on the same surface for more than 30 seconds.

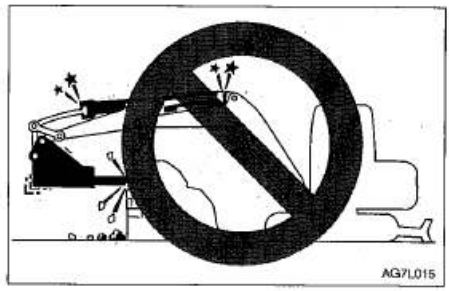

（7）Do not break when the cylinder is fully extended or fully retracted (end of stroke). Leave a gap of at least 50mm.

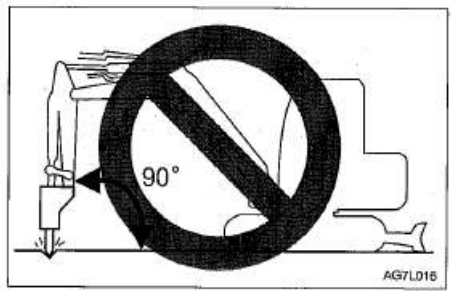

（8）Do not break the bucket when placed perpendicular to the ground.

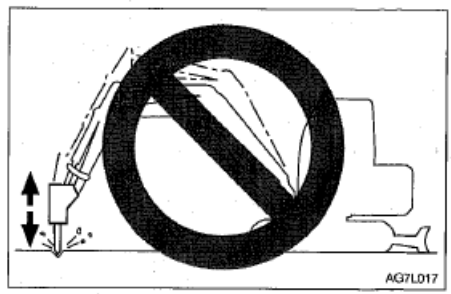

(9) Do not crush the object to be crushed by falling the hammer itself.
(10) Do not use a crushing hammer to move objects or rocks to be crushed.
(11) Occasionally rotate the machine to cool the engine.
(12) If there is abnormal vibration in the hydraulic pipe, it may be due to nitrogen leakage in the pressure accumulator. Please check as soon as possible.

Change hydraulic oil regularly

●Hydraulic oil deteriorates faster when using hydraulic breakers than during normal operation. Be sure to replace the hydraulic oil and return oil filter element.

● Failure to replace it in time will cause damage to the machine and the hydraulic system of the breaker. In order to prolong the service life of the hydraulic system, be sure to replace the hydraulic oil and the return oil filter poly filter element after the hours shown in the table below.

●When replacing hydraulic oil, please clean the oil suction filter.

Replacement interval (hours)

Item	Hydraulic oil	filter
first	-	25
second	-	100
Regular	1200(600)	200

Take a breaker operating ratio of 100% as an example.

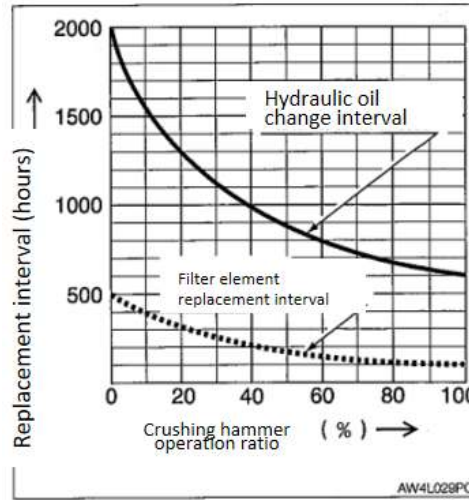

(): When using conventional anti-wear hydraulic oil.

Walking alarm device

The alarm sounds when the machine is walking, and stops when the machine stops.
If you cannot hear the alarm sound when the machine is running, the fuse may be blown, check the fuse.
If the fuse blows again soon after being replaced, the electronic system may malfunction. If it is not properly repaired, it may cause a fire hazard. For inquiries, please contact your sales or service agent.

1. Turn off the engine.
2. Open the rear cover.

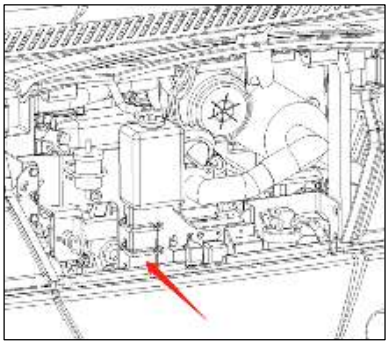

3. Open the fuse cover.
4. Check the fuse.

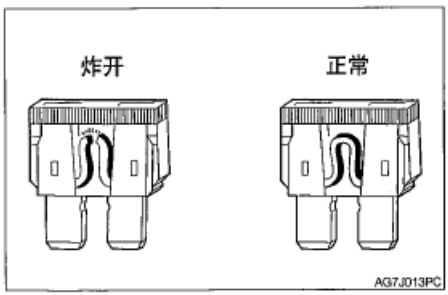

5. If the fuse is blown, please replace it with a spare fuse of the same specification.

Fuse arrangement and its protected circuit

灯电源Light 收音机ADIO 高低速Power	20A
点烟器Cigar 风　扇Fan 室内灯Cab light	20A
喇叭电源Horn 电磁阀Valve	20A
空调Air 雨刷清洗Wipe clean	20A
启动机B Starter B	60A
发电机B Generator B	40A

Weight of accessories

Accesories	Weight(kg)
Steel track	280
Grapper(without rotation)	55.8
Grapper (with rotation	107.4
Ripper	17.5
Rake	62
Narrow bucket（200mm）	35.6
Leveling bucket（500mm）	29.7
Leveling bucket（600mm）	35
Leveling bucket（800mm）	41.3
Leveling bucket（1000mm）	49.8
Leveling bucket（1200mm）	56.2
Fork	36
Siever bucket	36.2

*:The quality of the accessory is added to the quality of the standard machine.

*:This table only includes accessories with a mass of 10kg or more.

OPERATION MANUAL

RH22 **Mini excavator**

The information in this manual is subject to change without notice.

Version 1, February, 2023

Shandong Ken Stone Heavy Machinery Co., Ltd.

Add：20km west of Liaocheng, Shandong

Hot line：0635-8362550